A. Mounting Instructions

1. This RCCB is intended for installation within an enclosure. It should not be installed in an atmosphere subject to excessive pollution by smoke, dust, fumes, salt laden spray, prolonged periods of high humidity or other abnormal conditions. See current product catalogues for.a wide range of suitable enclosures.

2. As it is recommended that the consumer test the correct functioning of the RCCB at regular intervals, it should be mounted in an accessible position.

3. The operation of the RCCB is independent of its position of mounting and so if space does not permit it to be mounted veruically as intended, it can equally well be mounted horizontally and will function as effectiv-ely.

B. Connecting Instructions

4. The incoming cables to the RCCB may be taken either to the top or bottom set of terminals, dependent entirely on the ease of.wiring the device.

5. As the RCCB works on the current balance principle, all cables feeding the protected installation (live and neutral) must be connected to the device. If this is not complied with, continuous nuisance tripping of the breaker will result when power is drawn from the supply.

6. Should it be necessary to use a 4 pole RCCB for a single phase circuit, terminals 5/6 and N must be used, otherwise the test device will not be energised when the test button is pressed and will not function.

7. After installation, it is recommended that the insulation resistance of all the protected conductors (live and neutral) is measured with respect to earth, using a 500V in sulation tester. To do this it is necessary to connect one lead of the tester to the consumer' s earthing terminal and the other lead to each of the outgoing terminals in turn, with the RCCB in the OFF position. The insulation resistance measured must be at least the value prescribed in the current edition of the IEE Wiring Regulations (BS7671).

8. Where compliance with the disconnection times of the current edition of the IEE Wiring Regulations (BS767.1) is afforded by the RCCB, the measured value of the earth fault loop impedance in ohms must be such that the product of this value and the rated residual operating current of the RCCB in Amps, does not exceed 50.
   e.g. The maximum permissible earth loop impedance for an RCCB of 100mA sensitivity is 500 ohms since 500x0.1 =50

9. Where a circuit originates within the zone created by the main equipotential bonding of the installation, and that circuit is intended to supply equipment used outside the zone by means of a socket outlet rated at 32 A or less, the current edition of the IEE Wiring Regulatinos require that protection shall be afforded by an RCCB having a rated residual current not exceeding 30mA. The Regulations also require that every socket outlet in a household or similar installaion forming part of a TT system shall be similarly protected. Special provisions are also made in the Regulations for the protection of site installations serving mobile (touring) caravans.

C. Testing the RCCB

10. The consumer should be advised that a TEST BUTTON is incorporated in the RCCB situated adjacent to the ON/OFF switch.
    Having installed the unit and switched on the RCCB, press the test button In order to test the correct functioning of the device. This ONLY tests ths operation of the RCCB and not the continuity or value of the eatrh resistance path, which must be done as recommended in 8 above. A further test should then be carried out as prescribed In the current edition of the IEE Wiring Regulations to check the operation of the RCCB under fault conditions.
    Should the RCCB fail to trip on testing, check that there is an electrical supply available. If confirmed, return the unit to the supplier.

D. Earth continuity check on metalclad units

11. After the installation of a Metalclad unit and having securely tightened the lid fixing screws, it is necessary to check the earth continuity between the BOX and LID in accordance with the current edition of the IEE Wiring Regulations for Electrical Installations (BS7671).

E. APPENDIX

Figure 1

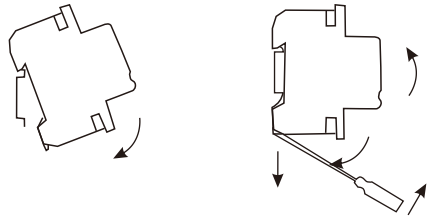

Figure 2

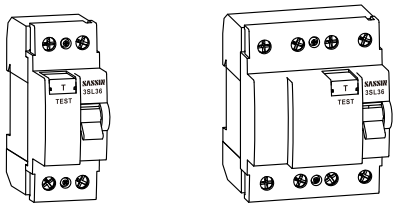

3SL36-63 2P　　3SL36-63 4P

Figure 3

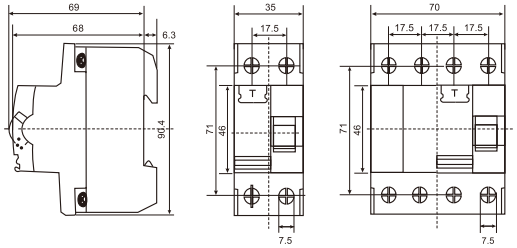

Figure 4

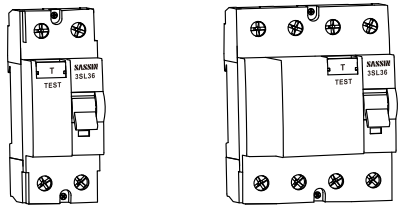

3SL36-100 2P　　3SL36-100 4P

Figure 5

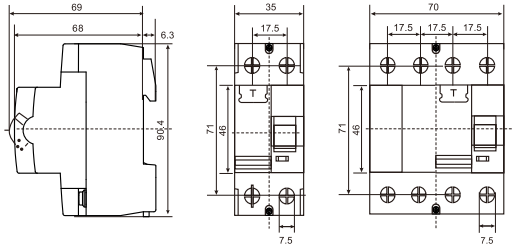

Figure 6

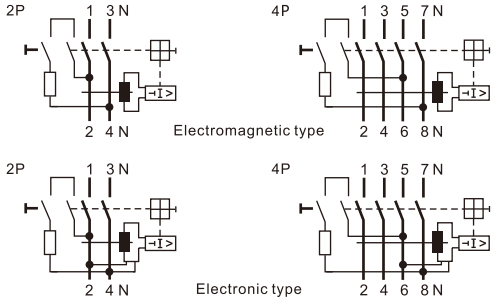

F. APPENDIX

Table

Rated Voltage(V ~)	230 400
Rated Current (A)	16 25 32 40 63 80 100
Rated residual operating Current(A)	0.03 0.1 0.3
Rated residual Non-operating Current (A)	0.5 $I_{\Delta n}$
Pole(P)	2 4
Breaking Capacity	4500
Mechanical life	10000

Note: If the seal protecting the cover fixing screw of the RCCB is broken, the guarantee is immediately invalidated.

SASSIN Better Electric Better Life

SASSIN INTERNATIONAL ELECTRIC SHANGHAI CO.,LTD.
No.2588 JINHAI RODA, PUDONG, SHANGHAI,CHINA 201209
TEL:+86-21-50210890 50219970
FAX:+86-21-50217333
E-mail:sassin@sassin.com
www.sassin.com

No.D0006

Better electric Better life SASSIN

Directions for use
Residual Current Circuit Breaker(RCCB)
3SL36

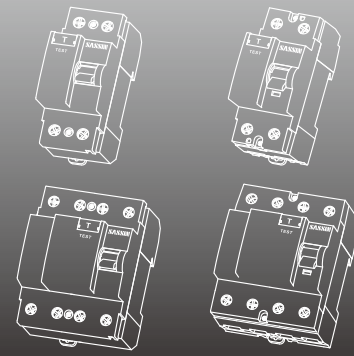

SASSIN INTERNATIONAL ELECTRIC

SASSIN Better Electric Better Life

SASSIN INTERNATIONAL ELECTRIC SHANGHAI CO.,LTD.
No.2588 JINHAI RODA, PUDONG, SHANGHAI,CHINA 201209
TEL:+86-21-50210890 50219970
FAX:+86-21-50217333
E-mail:sassin@sassin.com
www.sassin.com

No.D0006

Figure 4

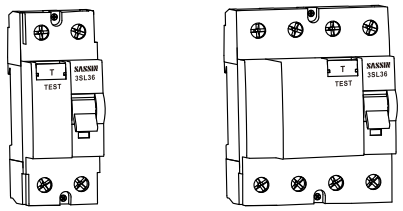

3SL36-100 2P 3SL36-100 4P

Figure 5

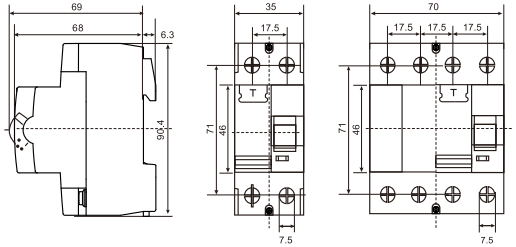

Figure 6

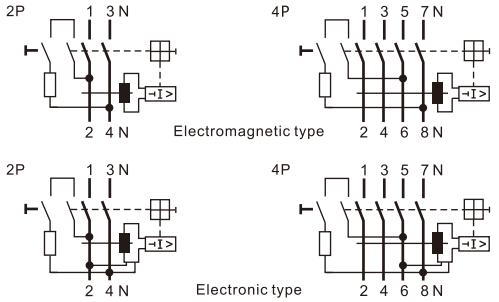

F. APPENDIX

Table

Rated Voltage(V ~)	230 400
Rated Current (A)	16 25 32 40 63 80 100
Rated residual operating Current(A)	0.03 0.1 0.3
Rated residual Non-operating Current (A)	0.5 $I_{\Delta n}$
Pole(P)	2 4
Breaking Capacity	4500
Mechanical life	10000

Note: If the seal protecting the cover fixing screw of the RCCB is broken, the guarantee is immediately invalidated.

Better electric Better life SASSIN

Directions for use
Residual Current Circuit Breaker(RCCB)
3SL36

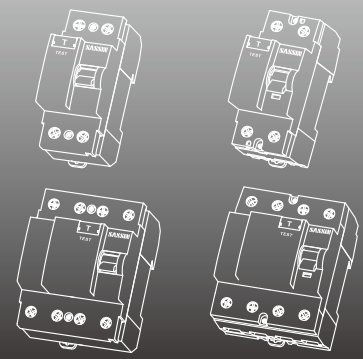

SASSIN INTERNATIONAL ELECTRIC

A. Mounting Instructions

1. This RCCB is intended for installation within an enclosure. It should not be installed in an atmosphere subject to excessive pollution by smoke, dust, fumes, salt laden spray, prolonged periods of high humidity or other abnormal conditions. See current product catalogues for.a wide range of suitable enclosures.

2. As it is recommended that the consumer test the correct functioning of the RCCB at regular intervals, it should be mounted in an accessible position.

3. The operation of the RCCB is independent of its position of mounting and so if space does not permit it to be mounted verically as intended, it can equally well be mounted horizontally and will function as effectively.

B. Connecting Instructions

4. The incoming cables to the RCCB may be taken either to the top or bottom set of terminals, dependent entirely on the ease of.wiring the device.

5. As the RCCB works on the current balance principle, all cables feeding the protected installation (live and neutral) must be connected to the device. If this is not complied with, continuous nuisance tripping of the breaker will result when power is drawn from the supply.

6. Should it be necessary to use a 4 pole RCCB for a single phase circuit, terminals 5/6 and N must be used, otherwise the test device will not be energised when the test button is pressed and will not function.

7. After installation, it is recommended that the insulation resistance of all the protected conductors (live and neutral) is measured with respect to earth, using a 500V in sulation tester. To do this it is necessary to connect one lead of the tester to the consumer' s earthing terminal and the other lead to each of the outgoing terminals in turn, with the RCCB in the OFF position. The insulation resistance measured must be at least the value prescribed in the current edition of the IEE Wiring Regulations (BS7671).

8. Where compliance with the disconnection times of the current edition of the IEE Wiring Regulations (BS767.1) is afforded by the RCCB, the measured value of the earth fault loop impedance in ohms must be such that the product of this value and the rated residual operating current of the RCCB in Amps, does not exceed 50.
   e.g. The maximum permissible earth loop impedance for an RCCB of 100mA sensitivity is 500 ohms since 500x0.1 =50

9. Where a circuit originates within the zone created by the main equipotential bonding of the installation, and that circuit is intended to supply equipment used outside the zone by means of a socket outlet rated at 32 A or less, the current edition of the IEE Wiring Regulatinos require that protection shall be afforded by an RCCB having a rated residual current not exceeding 30mA. The Regulations also require that every socket outlet in a household or similar installaion forming part of a TT system shall be similarly protected. Special provisions are also made in the Regulations for the protection of site installations serving mobile (touring) caravans.

C. Testing the RCCB

10. The consumer should be advised that a TEST BUTTON is incorporated in the RCCB situated adjacent to the ON/OFF switch.
    Having installed the unit and switched on the RCCB, press the test button In order to test the correct functioning of the device. This ONLY tests ths operation of the RCCB and not the continuity or value of the eatrh resistance path, which must be done as recommended in 8 above. A further test should then be carried out as prescribed In the current edition of the IEE Wiring Regulations to check the operation of the RCCB under fault conditions.
    Should the RCCB fail to trip on testing, check that there is an electrical supply available. If confirmed, return the unit to the supplier.

D. Earth continuity check on metalclad units

11. After the installation of a Metalclad unit and having securely tightened the lid fixing screws, it is necessary to check the earth continuity between the BOX and LID in accordance with the current edition of the IEE Wiring Regulations for Electrical Installations (BS7671).

E. APPENDIX

Figure 1

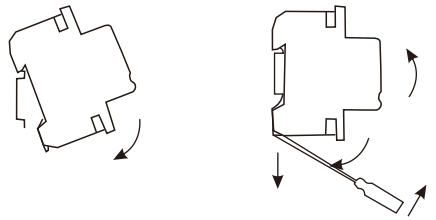

Figure 2

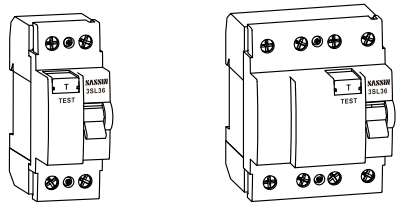

3SL36-63 2P 3SL36-63 4P

Figure 3

