SASSIN

Better Electric, Better Life

SASSIN INTERNATIONAL ELECTRIC SHANGHAI CO.,LTD.
No.2588 JINHAI ROAD, PUDONG, SHANGHAI, CHINA 201209
TEL: +86-21-50210890 50219970
FAX: +86-21-50217333
E-mail: sassin@sassin.com
Http: //www.sassin.com

Specifications and technical date are subject to change without notice. Please contact us for any relevant information on ordering.

SASSIN V 27.3 PRODUCT CATALOG

SASSIN

Echo Series





Company Profile

As one of the leading enterprises in the low voltage electrics field in China, Sassin International Electric Shanghai Co., Ltd is committed to offering professional solutions of low voltage electric and smart electricity for different fields customers from the countries and regions around the world, to satisfy worldwide customers' requirements on utilizing energy more safely and conveniently, help customers to constantly improve efficiency of production and energy, and reducing their impact on the environment.

Sassin focuses on the global market, driving the company development with technical R&D. Sassin is committed to researching and developing different low electric products to satisfy the different requirements from customers all over the world. With the trend of intelligent electricity, Sassin has developed the smart electric devices and Smart Power Management System - SPMS to protect the safety of life and property, make the electricity management easily and remotely in any time at any place, and improve the power efficiency. In order to achieve the quick R&D, Sassin has set up the Test Center including a 10kA Short Circuit Breaking Laboratory, the Test Center has been certified by the CNAS (China National Accreditation Service for Conformity Assessment).

Quality is company's life. Sassin is always sparing no effort to promote the construction of quality management system and improve it. For this purpose, Sassin implemented the Total Quality Management System, and oriented by market and customers, to drive the employees and suppliers focusing on the continuous improvement of product quality. Sassin has been certified by the ISO9001 Quality Management System and ISO14001 Environment Management System.

Corporate Culture - Value System

Vision

Better Electric, Better Life.

Mission

Make electric safe, convenient and efficient

Value

Confidence, Faith, Credit.

Catalog Classification

V 27.1 Super Series

- **Power Distribution Electrics:** Air Circuit Breakers / Moulded Case Circuit Breakers / Automatic Transfer Switches
- **Modular DIN Rail Devices:** MCB / Residual Current Devices / Surge Protective Devices / Switching Devices / Distribution Boxes
- **Industrial Control And Protection:** Contactors / Starters / Thermal Overload Relays / Motor Protection Circuit Breakers



V 27.2 Pro Series

- **Power Distribution Electrics:** Air Circuit Breakers / Moulded Case Circuit Breakers / Automatic Transfer Switches
- **Modular DIN Rail Devices:** MCB / Residual Current Devices / Surge Protective Devices / Switching Devices / Distribution Boxes
- **Industrial Control And Protection:** Contactors / Starters / Thermal Overload Relays / Motor Protection Circuit Breakers



V 27.3 Echo Series

- **Power Distribution Electrics:** Air Circuit Breakers / Moulded Case Circuit Breakers / Automatic Transfer Switches
- **Modular DIN Rail Devices:** MCB / Residual Current Devices / Surge Protective Devices / Switching Devices / Distribution Boxes
- **Industrial Control And Protection:** Contactors / Starters / Thermal Overload Relays / Motor Protection Circuit Breakers



V 27.4 Switches and Relays

- Load Break Switches
- Fuse Combination Switches
- Fuse Disconnector Switches
- Low Voltage Fuses
- Rotary Change-over Cam Switches
- Pushbutton Switches
- Switches
- Relays



V 27.5 Power Sources

- Automatic Voltage Stabilizers
- Voltage Regulators
- Compensated Voltage Stabilizers
- Pure Sine Wave Inverters
- Back Up UPS
- Switching Power Supplies
- Control Transformers



V 27.6 Meters & Electrical Accessories

- Electronic Kilowatt Hour Meters
- Power Capacitors
- Analogue Panel Meters
- Digital Panel Meters
- Current Transformers
- Metal Boxes
- Terminal Blocks
- PC Plug Socket Couplings
- Electric Bell & Buzzers



Catalog USB Memory Stick

All products in these catalogs listed above are available in USB memory stick.



Catalog PDF

www.sassin.com

All catalogs can be downloaded as PDF files from SASSIN website.









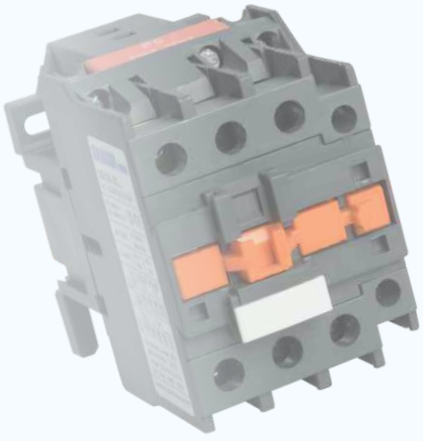

Echo Series

Power Distribution Electrics

Air Circuit Breakers

P 1-32 VA51

Moulded Case Circuit Breakers

P 33-41 VM51, MCCBs with thermal magnetic trip units

P 42-45 VM51E, MCCBs with electronic trip units

P 46-60 VM51L, MCCBs with earth leakage protection

Automatic Transfer Switches

P 61-64 VAQ51B, CB class, up to 63 A

Modular DIN Rail Devices

Miniature Circuit Breakers

P 65-66 VB510, 6000 A

P 67-68 VBN515, 1P+N in 1 modular width

P 69-70 VBH510, high current, 6 kA

Residual Current Devices

P 71-75 RCCB, VRC510, up to 100 A

P 76-77 RCBO, VRBNC515E, compact

P 78-79 RCBO, VRBNE515, integrated with earthing cable

P 80-93 RCBO, VRB510E, up to 80 A

Surge Protective Devices

P 94-97 3SU1, type 2

Switching Devices

P 98 VG510, switch disconnectors

P 99 VFG51, fuse switch disconnectors

P 100-105 VCH51, modular contactors

Distribution Boxes

P 106 VD51MS, metal

Industrial Control And Protection

Contactors

P 107-110 VC51K, mini contactors, up to 51.5 kW

P 111-117 VC51, contactors, up to 45 kW

P 118-123 VC51F, contactors, up to 400 kW

P 124-126 VC51C, contactors for capacitor switching

Thermal Overload Relays

P 127-128 VTR51K, from 0.11 to 14 A

P 129-131 VTR51, from 0.1 to 93 A

P 132-133 VTR51F, from 30 to 630 A

Starters

P 134-135 VQ51, enclosed direct-on-line (DOL) starters

P 136-137 VXQ51, star-delta startors

Motor Protection Circuit Breakers

P 138-140 VMP51, from 0.1 to 80 A

Contents

Features

- Fully Intelligent, high breaking capacity, zero arcing distance, etc.
- Rated current (AC): 630 A-6300 A.
- Short circuit breaking capacity: 80 kA-120 kA.
- Number of Poles: 3P, 4P.
- Installation method: withdrawable type, fixed type.
- Power supply: the circuit breakers can be supplied from either upper or lower terminals.
- Functions of electronic trip unit: displaying, setting, monitoring, fault memory, communication interface available, telemetry, remote control, remote adjustment, and remote communication.
- VA51 series air circuit breaker has complete protection features, such as Instantaneous, short-time delay, long-time delay, single-phase grounding, and the setting is convenient with high precision.



Applications and functions

- VA51 series air circuit breaker is applied to distribute electrical energy and protecte circuit and power supply equipments in AC power distribution network with 50 Hz, rated voltage up to 660 V (690 V) and rated current from 630 A to 6300 A to prevent it from overload, under voltage, short circuit, single phase grounding hazards and other faults.
- The circuit breaker has intelligent protecting functions, and the selective protection accuracy, which can improve the reliability of power supply and avoid unnecessary power faults. it has an open communication interface for “four remote patterns” to meet the requirements of control centers and automation systems.
- The circuit breaker has a pulse withstand voltage of 8000 V at an altitude of 2000 meters (it will be modified according to the different altitudes, and the maximum is no more than 12000 V).
  The circuit breaker can be used as an isolator without an intelligent controller and sensor, marked as —/ ⊢× .
- The circuit breaker complies with standard IEC 60947-2, Low-voltage switchgear and controlgear-Part 2: Circuit-breakers.

Instruction of classification

- Installation Type:
  - a. Fixed type
  - b. Withdrawable type
- Number of Poles: 3P, 4P
- Operation method
  - Electric operation
  - Manual operation (for text and maintenance)
- Release type:
  - electronic trip unit undervoltage release shunt release

Normal working and installation conditions

- Ambient air temperature
  - The upper limit does not higher than +40 °C, the lower limit is not lower than -5 °C, and the average temperature of 24 h does not higher than +35 °C.
    Note: For working conditions where the upper limit exceeds +40 °C or the lower limit is lower than -10 °C or -25 °C, the user should inform us and the altitude of the installation site should not exceed 2000 m.
- The relative humidity of the atmosphere is no more than 50% when the ambient air is +40 °C. It can have a higher relative humidity at a lower temperature. The maximum relative humidity of the wettest month is 90%, and the average minimum temperature of the month is 20 °C, in the meanwhile we should also consider the condensation on the surface of the product due to temperature changes. The requirements’ exceeding shall be negotiated with the manufacturer.
- Degree of Protection: IP30
- Pollution level: 3
- Use category: B
- Installation Category:
  - Circuit breakers with rated operating voltages equal to or below 660 V (690 V) and under-voltage release and primary coils for power transformers shall be applied to the installation category IV
  - The auxiliary circuit and control circuit installation category shall be III.
- Installation conditions
  - The circuit breaker shall be installed in accordance with the requirements of this manual. The vertical inclination of the circuit breaker shall not exceed 5 degrees (the mining circuit breaker shall not exceed 15 degrees)

Structure overview

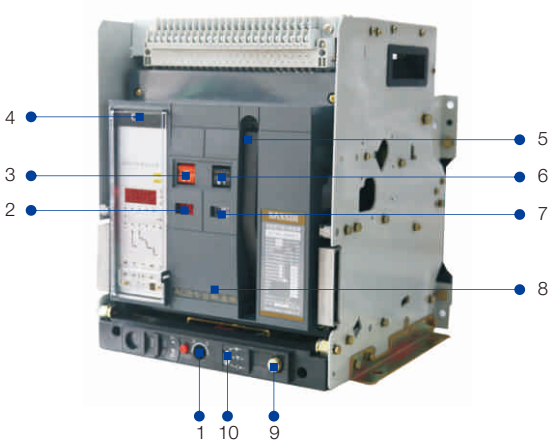

1. Cranking bar operation hole
2. Indicator of circuit breaker closed (I) and open (O)
3. Switching-OFF button
4. “Opening” lock mechanism
5. Lever to manually charge closing springs
6. Switching-ON button
7. Stored energy release indicator
8. Circuit breaker cover
9. Cranking bar storage hole
10. “Unlocking button” for the three positions (“separated”, “test” and “connected”)



VA5120



VA5132



VA5140



VA5163

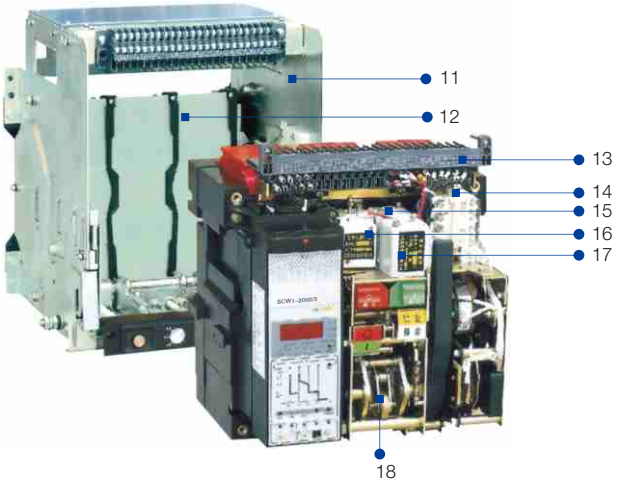



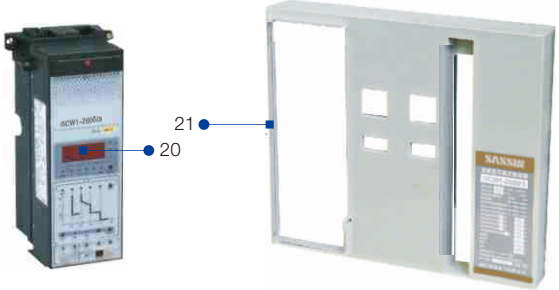

Withdrawable Circuit breaker

11. Drawer base
12. Safety partition
13. The terminal block for secondary circuit
14. Auxiliary contact
15. Shunt release
16. Undervoltage release
17. Closing coil
18. Operational mechanism
19. Motorized operating mechanism
20. Electronic trip unit
21. Circuit breaker cover

Technical data for circuit breakers

Rated current

Size	Rated current In (A)
VA5120	630, 800, 1000, 1250, 1600, 2000
VA5132	2000, 2500, 2900, 3200
VA5140	3200, 3600, 4000
VA5163	4000, 5000, 6300

Breaking capacity

Size			VA5120	VA5132	VA5140	VA5163
Rated ultimate short-circuit breaking capacity	Icu (kA)	400 V	80	100	100	120
		690 V	50	65	65	80
Rated operational short-circuit breaking capacity	Ics (kA)	400 V	50	65	65	80
		690 V	40	50	50	70
Rated short-time withstand current	Icw (kA) 1 s	400 V	50	65	65	85
		690 V	40	50	50	65
Rated short-circuit making capacity	n×Icu (kA)/cosØ	400 V	176/0.2	220/0.2	220/0.2	264/0.2
		690 V	105/0.25	143/0.2	143/0.2	187/0.2

Power losses

Maximum power losses of the circuit breaker is 360 W.

Temperature derating

Ambient temperature °C	630 A	800 A	1000 A	1250 A	1600 A	2000 A
40	630 A	800 A	1000 A	1250 A	1600 A	2000 A
50	630 A	800 A	1000 A	1250 A	1550 A	1900 A
60	630 A	800 A	1000 A	1250 A	1550 A	1800 A

Note: The derating coefficients is 0.9 for circuit breakers with rated current 2500 A and above, but there is no derating for circuit breaker with rated current 4000 A undersize VA5163.

Protection characteristics

Long-time delay protection (L)

Current setting Ir1		(0.4 - 1) In					
Action characteristics	≤ 1.5 Ir1	> 2 h no action					
	> 1.3 Ir1	< 1 h action					
Time setting (s)	1.5 Ir1	15	30	60	120	240	480
(Inverse time)	2 Ir1	8.4	16.9	33.7	67.5	135	270
Accuracy		± 15%					

Short-time delay protection (S)

Current setting Ir2		(0.4 - 15) In			
Accuracy		± 10%			
Time delay	Time setting (s)	0.1	0.2	0.3	0.4
(Definite time)	Return time (s)	0.06	0.14	0.23	0.35
Accuracy		± 15%			
I > 8 Ir1	Time setting (s)	0.1	0.2	0.3	0.4
(Definite time)	Return time (s)	0.06	0.14	0.23	0.35
Accuracy		± 15%			
I ≤ 8 Ir1	Time setting (s)	0.1	0.2	0.3	0.4
(Inverse time)	Return time (s)	0.06	0.14	0.23	0.35
Accuracy		± 15%			

Instantanesous protection (I)

Current setting Ir3	VA5120	In … 50 kA
	VA5132	In … 75 kA
	VA5140	In … 75 kA
	VA5163	In … 100 kA
Accuracy		± 15%

Earth fault protection

Current setting Ir3	VA5120	In … 50 kA
	VA5132	In … 75 kA
	VA5140	In … 75 kA
	VA5163	In … 100 kA
Accuracy		± 15%

Note:
The setting values can not be crossed for circuit breakers with protection LSI.

Protection characteristics

M type

- **Ammeter function:** display the operation current and ground leakage current of each phase, display the maximum phase current normally, and display the setting, test and fault current value or time value.
- **Voltmeter function:** display the voltage of each phase, and display the maximum value normally. Remote monitoring and self-diagnosis function:
- The electronic trip unit has a local fault self-diagnosis function. When the computer malfunctions, it will display an error “E” as alarm, and restart the computer. If necessary, the circuit breaker can also be switched off.
- When the local ambient temperature reaches 80 °C, an alarm will be sent out and the circuit breaker can be switched-off at a small current (base on users’ requirements).
- The electronic trip unit signals for overload, grounding, short circuit, load monitoring, pre-alarm, trip indicator (OCR) could be output through the contact or diaphragm, which is convenient for connecting external remote control. The contact capacity is DC 28 V, 3 A; AC 125 V, 3 A.
- **Setting function:** Various parameters can be adjusted by four buttons “Set” “+” “-” “Storage”.
- Press “Set” to set the required status (status indicator), then press “+” or “-” to adjust the parameter to the required value.
- Press “storage” and the light will turn on once only, it shows that the setting value is saved. Note that the protecting parameters could not be set crossing. After powered-off and reset, press the “Set” button again to check various parameters set in circle.
- **Test function:** Use the “Settings”, “+”, “-”, “tripping”, “non-tripping”, “reset” buttons to check the various protections of the electronic trip unit. Use the “Settings” “+” and “-” buttons to adjust a test current to simulate the fault. (Note: do not lock the “storage” button) and then press the “tripping” or “non-tripping” button to test. The electronic trip unit is in the fault handling status. Press the “tripping” button, the circuit breaker will be switched off, press the “non-tripping” button, the circuit breaker will not be switched off, and the various indication status of the electronic trip unit is normal. After the test, press the “reset” or “clear” button to perform other tests.
  Note:
  For the convenience of testing, the grounding leakage is set to tripping regardless of the tripping or alarm position, and the priority is less than the overload protection. Once a fault occurs during the test, the electronic trip unit automatically stops all tests and will enter the fault handling status.
- **Load monitoring function**
- Set two setting values: ILC1 setting range (0.2 -1) In, ILC2 setting range (0.2 -1) In. ILC1 delay is with inverse time characteristic, and its time setting value is 1/2 of long-time delay setting value; There are two kinds of time-delay characteristics of ILC2. The first one is inverse time protection, and the time setting value is 1/4 of the long-time delay setting value; the second type is definite time protection, and the delay time is 60 s. The inverse time protection is used to break the downstream unimportant load when the current is close to the overload setting value, and the definite time protection works when the current exceeds the ILC1 setting value, breaks the downstream unimportant load after the delayed time, to keep the power supply for the main circuit and the important load after a certain delayed time. When the current drops to ILC2, after a certain delay, a signal is issued to turn on the downstream that has been cut off to restore the power supply. The users can choose either of these two monitoring functions.
- **MCR tripping and simulating tripping protection**, This function can be turned off as requirements. Generally it should be turned off while taking the short-time delayed breaking test.
- MCR making and breaking protection is mainly used when there is a circuit fault state and the circuit is closed (when the electronic trip unit is with power instantaneously), the electronic trip unit has the function of breaking the circuit breaker at low short-circuit current. The factory setting is 10 kA with the tolerance ± 20%, and the set current can be customized according to the users’ requirements.
- The electronic trip unit is equipped with another function that when a large short circuit current occurs, the tripping signal will be sent out directly, without being processed via the chip.
- **Thermal memory function:** After tripping due to overload and short-circuit current, before the power-off of the electronic trip unit, the memory function on simulating bimetal characteristics will work, and the overload energy will be released within 30 minutes, and the short delay energy will be released within 15 minutes. During the period, if overload or short-circuit occurs, the trip time is shorter, All energy is cleared if the electronic trip unit lose power supply.

Protection characteristics

H type

In addition to all functions of M type, it also has a serial communication interface, which can form a client-server LAN system through communication interface (here referred as the system), with 1-2 computers as the client stations, several intelligent circuit breakers or other communication components as the server stations. The system network structure is as shown in the figure below. For the circuit breaker unit, the system can realize the long-distance “four remote patterns” function: monitoring of various power grid parameters and operating parameters, monitoring of the current operating status of the intelligent circuit breaker, various adjustments and downloading of limit parameters, opening and closing operational control of intelligent circuit breakers, etc. The system is applicable to the construction and transformation of power distribution monitoring systems for various power stations, power plants, medium and small substations, industrial and mining enterprises, and buildings.

The connection diagram of the dedicated communication protocol interface is as follows:

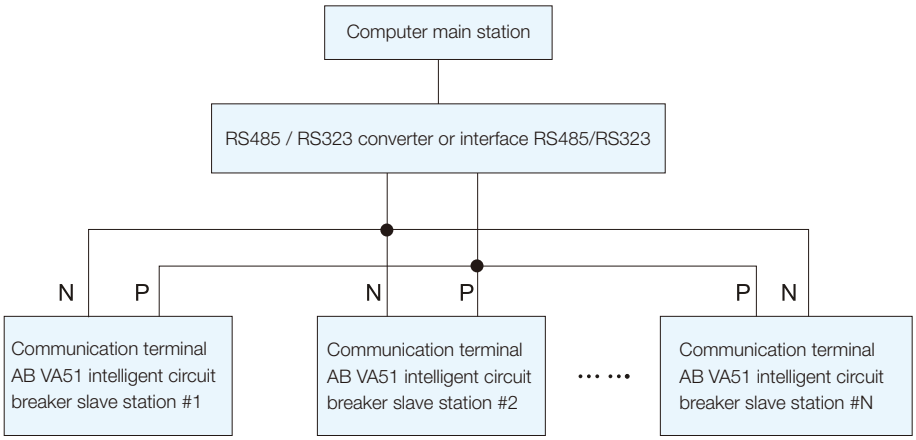

The connection diagram of the circuit breaker products based on the general DP protocol is as follows:

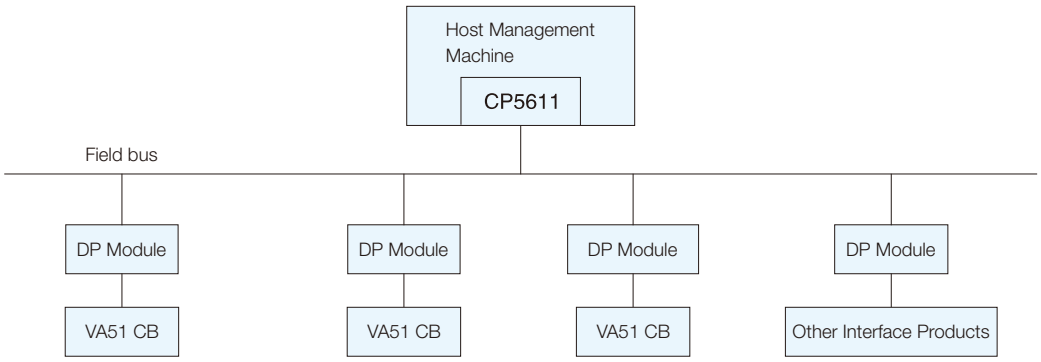

The composition of the system:

- The hardware structure of the data communication network system.
- The intelligent circuit breaker provides a standard RS485 communication interface, which is taken out from the 10 and 11 outlets of the circuit breaker;
- Communication medium connected by the system: Class A shielded twisted pair.

Protection characteristics

H type

There are two types available:
M type-Standard type (figures display current, button for adjustment)
H type-Communication type (figures display current, button adjusting and for communication)

Main characteristics of Network

- Two-way serial data transmission mode, the product can provide a variety of communication protocol methods: “Low-voltage electrical data transmission communication protocol V1. 0”, PR OF US-DP, MODEBUS and so on. Strict client-server mode, that is, the client station is the initiator and controller of the communication, and the server station can only communicate with the client station. It is not possible to communicate directly with other servers. The communication baud rate is 9600 bit/s and the communication distance is 1.2 km. The typical application for PROFJBUS-DP communication baud rate is 187.Skbit/s.
- Monitoring software:
  YSS 2000 configuration software can realize the configuration application of the required monitoring management software according to different engineering requirements. When it comes to intelligent circuit breakers, operational monitoring operations and a variety of day-to-day management functions are available.,

System functions

- Remote control: Remote control refers to the operation control of energy storage, closing and disconnection of each server circuit breaker in the system through the client station computer. The operator selects the corresponding object from the system interface, and clicks the remote control button with the mouse to provide the current running state of the corresponding parts. After the operator inputs the password, the remote “close” or “open” command can be issued. The system transmits the signal to the corresponding circuit breaker server station. After the server station receives the command, it performs the operations of breaking, closing, and energy storage according to the predetermined timing, and reports the result of the remote control to the client station.
- Remote adjustment: The function refers to the setting of the protection value of the server station through the client station computer. A protection setting table for all servers is stored in the clients station computer.
  The operator selects the corresponding parts from the system interface, and clicks the remote adjustment button with the mouse, then the system provides the current setting of all the protection values of the corresponding parts and the setting table of the protection. After the operator inputs the password, the parameter can be obtained. Select the required parameters in the table, and then click the corresponding button, the main station will download the parameters given to the corresponding server station, and reports the remote adjustment results. After the server station receives the instruction, it modifies its own protection value.
- Remote Test: The function refers to the real-time monitoring of the grid operating parameters of each server station through the client station computer. The substation of communication submits the working parameters to the upper computer as follows: real-time A, B, C, N phase current values of each substation, and Uab, Ube, Uca voltage values, etc. The fault records include the current values of A, B, C, and N phases, the voltage values of Uab, Ube, and Uca, the type of fault, and the action time. Then it records the fault in database. The computer displays the current real-time current and voltage of each substation in the form of bar graph and absolute value table, and displays the running status of each node in real-time curve.
- Remote communication: Remote communication refers to the status of the server station, the status of opening and closing, the various protection settings, and the operation and fault information status of the server station through the client station computer. The parameters of the server circuit breaker reporting to the upper machine are: Switch model, Switch status, Fault information, Alarm information, various protection settings and so on.
  Other functions of the system: In addition to the four remote operation control functions, the system can also perform a variety of management functions such as accident alarm (information screen, pictures, event printing, accident dialing, audible alarm), event recording, maintenance listing, handover management, load trend analysis, multiple report printing, etc.

Panel structure

M type (power distribution)

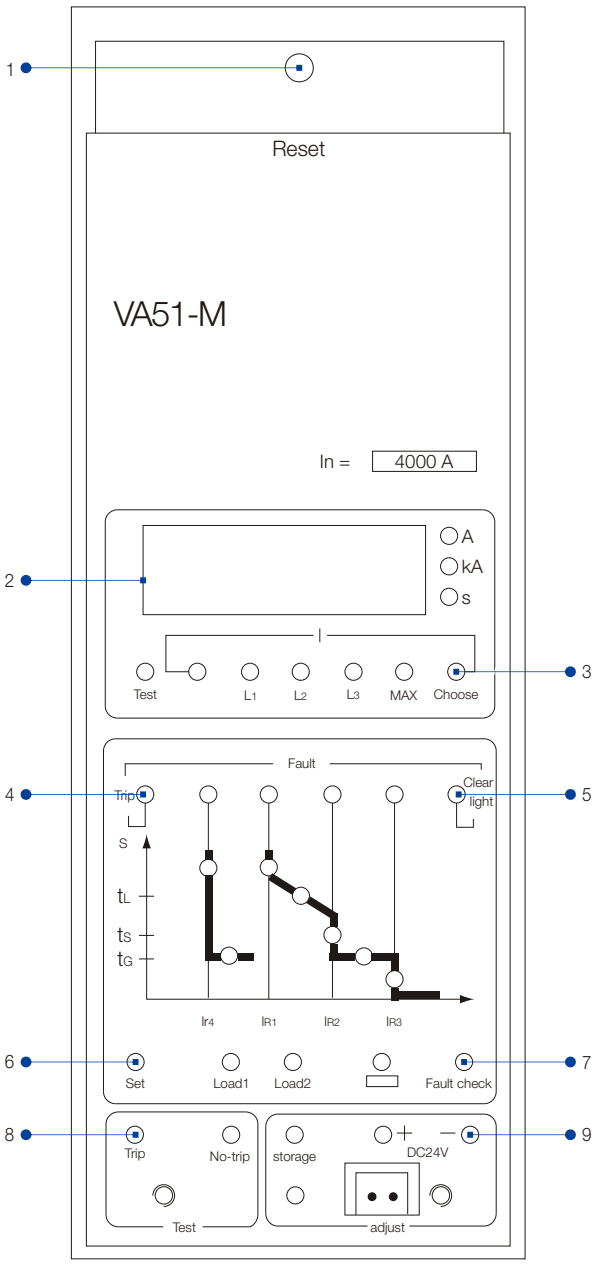

1. Reset button. If the circuit breaker need to close again after tripping, press the reset button, otherwise the circuit breaker cannot be closed.
2. Current (Voltage) and time display, value of current (Voltage) and time can be displayed.
3. “Selection” key. During normal operation, the value of current (voltage) can be displayed in a loop, and the fault current or time value can be displayed in a loop under the status of fault or fault inspection.
4. LED light indicator can indicate type of fault.
5. Light clear reset button, must be pressed to make the trip device in normal operation when setting the electronic trip unit or after the fault test or before the circuit breaker closed.
6. Parameter setting button. Check or set the current or time for different protection characteristics. Press to indicate each status in a loop.
7. “Fault check” key. After the electronic trip unit “clear light”, press this button to display the status of last fault status and current and time. The fault current or time will be checked cyclically by pressing “Selection” button.
8. Trip test button
9. “-”, “+” key. Setting current or time.
   Ir4- current setting for ground fault protection
   Ir1- current setting for long-time delayed protection
   Ir2- current setting for short-time delayed protection
   Ir3- current setting for instantaneous protection
   TG- time setting for ground fault protection
   TL- time setting for long-time delayed protection
   Ts- time setting for short-time delayed protection

Panel structure

M-type (motor protection)

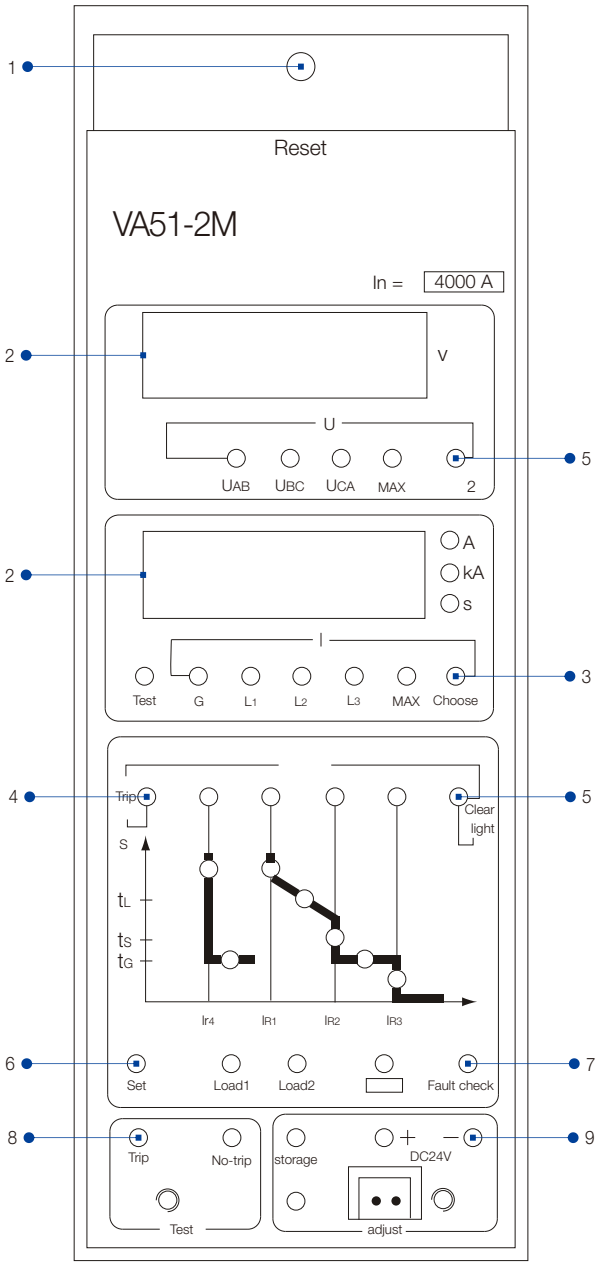

1. Reset button. If the circuit breaker need to close again after tripping, press the reset button, otherwise the circuit breaker cannot be closed.
2. Current (Voltage) and time display, value of current (Voltage) and time can be displayed.
3. “Selection” key. During normal operation, the value of current (voltage) can be displayed in a loop, and the fault current or time value can be displayed in a loop under the status of fault or fault inspection.
4. LED light indicator can indicate type of fault.
5. Light clear reset button, must be pressed to make the trip device in normal operation when setting the electronic trip unit or after the fault test or before the circuit breaker closed.
6. Parameter setting button. Check or set the current or time for differentprotection characteristics. Press this key to indicate each status in a loop.
7. “Fault check” key. After the electronic trip unit “clear light”, press this button to display the status of last fault status and current and time. The fault current or time will be checked cyclically by pressing “Selection” button.
8. Trip test button
9. “-”, “+” key. Setting current or time.
   Ir4- current setting for ground fault protection
   Ir1- current setting for long-time delayed protection
   Ir2- current setting for short-time delayed protection
   Ir3- current setting for instantaneous protection
   TG- time setting for ground fault protection
   TL- time setting for long-time delayed protection
   Ts- time setting for short-time delayed protection

Panel structure

H-type





1. LCD display
2. Fault and alarm reset button
3. “Fault and alarm” LED LED indicator will not lighten when normal operation; LED flash quickly when maintenance; LED turned red when alarm.
4. “Normal” LED
   LED blinking green color on normal working condition.
5. Curve LED
   The red LED hide inside curve. The corresponding LED flashes to indicate the type of fault when fault trip occurs. When setting protection parameters, LED constant lighting indicate the current setting item.
6. Reset button:
   Reset button pops up when tripping or test tripping. The circuit-breaker can’t switch on if the button hasn’t pressed down; press down the button and the fault indications will recovery.

Keyboard

7. Measurement function key 1, can be switched to be default theme menu. (Measurement function key is the “left” key in the password input interface)
8. Setting function key 2: can be switched to the parameter setting menu. (setting function is the “right” key in the password input screen).
9. Protection function key 3: switch to the parameter setting protection menu.
10. Information function key 4: switch to history record and menu maintenance.
11. Up-move up or change the parameter.
12. Down-move down or change the parameter.
13. Exit-exit and enter the previous menu or cancel the current selected parameters.
14. Choice-enter into the next menu or select the parameters and save and the amendment.
15. Test port-There is a 16 pin test plug at the bottom of the front panel, a portable power pack or detection unit can be insert able.

Internal wiring

Ground fault protection

- 3PT Type
  Differential ground fault protection, the signal only takes the vector sum of the three-phase current (three-phase unbalance)

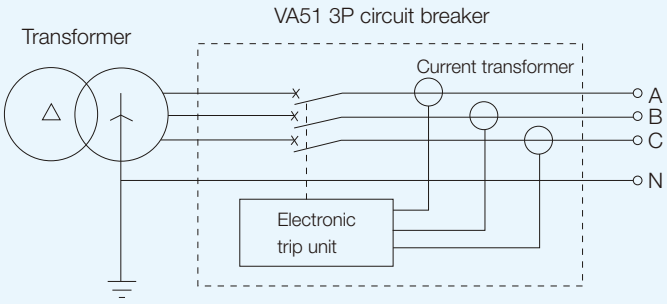

- 4PT Type
  Differential ground fault protection, the signal takes the vector sum of the three-phase current and the N-phase current

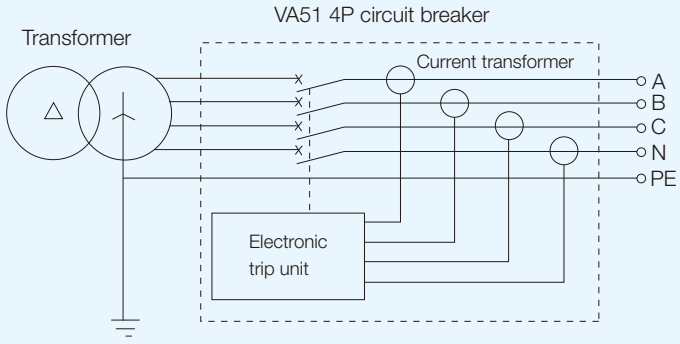

- (3P+N) T Type
  External neutral pole transformer differential ground fault protection, the signal only takes the vector sum of three-phase current and N-phase current

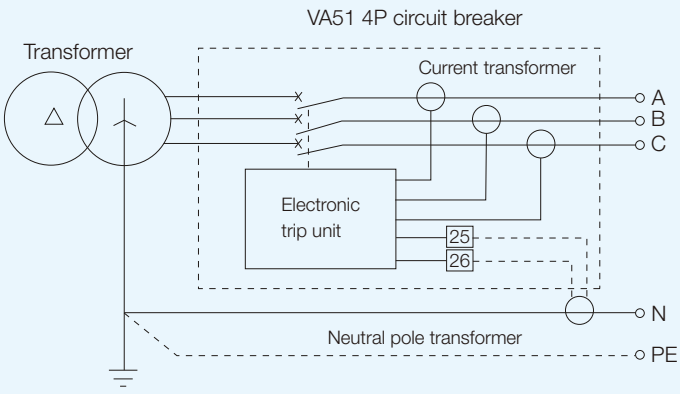

- (3P+N) W Type
  Current grounding fault protection of external grounding current transformer, the signal is directly taken between the neutral point of the main power supply and the ground

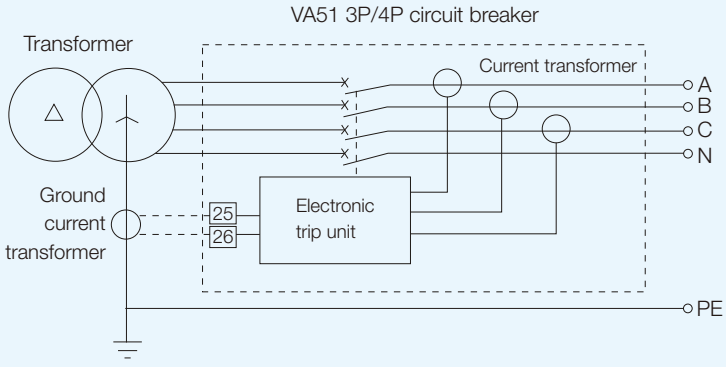

External single-phase grounding protection

The external current transformer for neutral conductor or for earth-fault protection is provided as an accessory which can be installed on the busbar and connects the wiring (length 2 m) to the secondary circuit terminals #25, #26.

The size of the center hole of the external current transformer (the maximum allowable dimensions of the core busbar) is as follows:

Type		Width	Height
VA5120, VA5140/4P	Electronic trip unit	61	21
VA5132, VA5140/3P, VA5163	Electronic trip unit	87	31

Diagram

M type

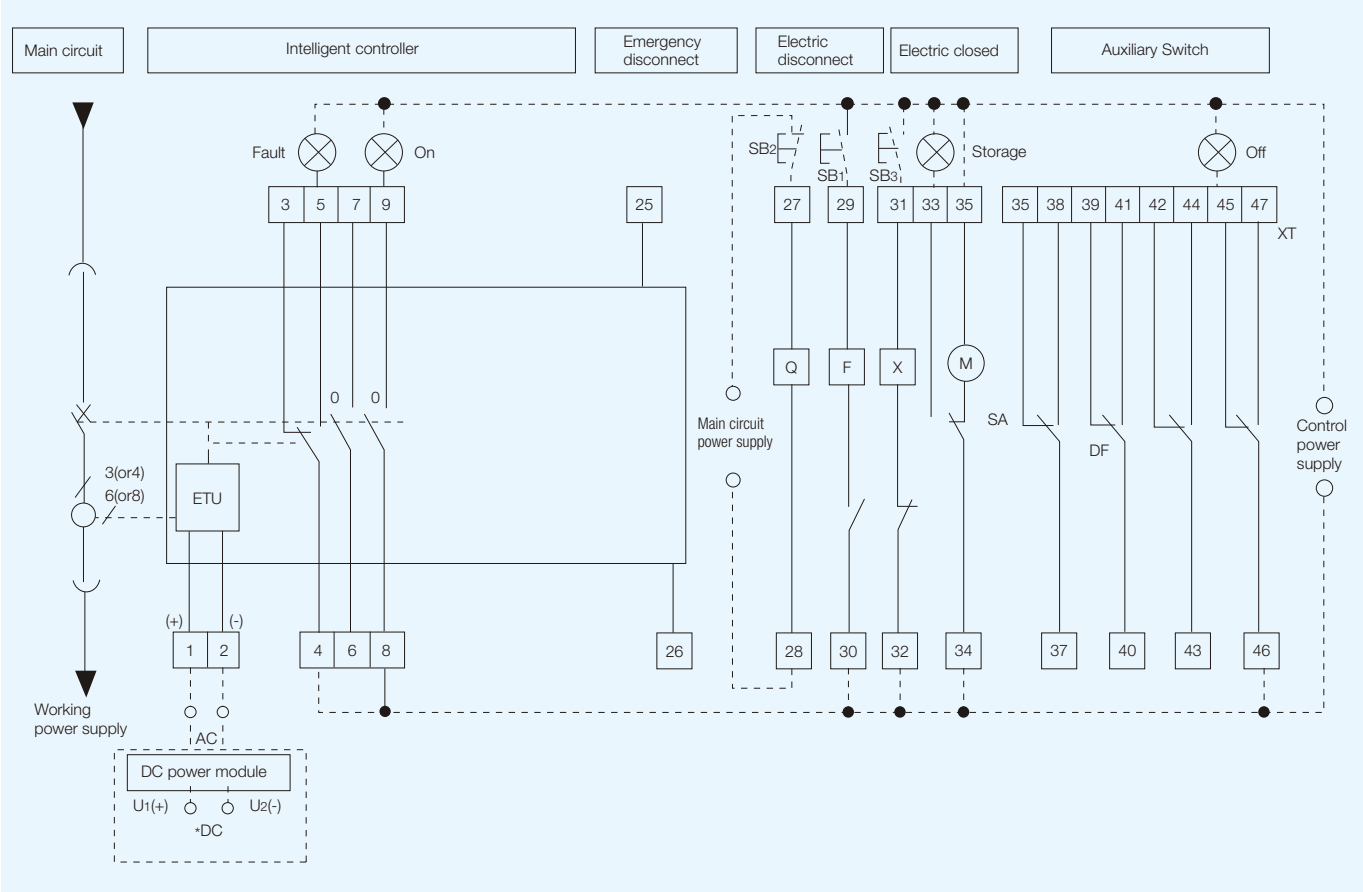

Note:

1) If the control power supply voltages of F, X, and M are different, separate power supplies should be connected.
2) Terminal #35 can be connected directly to the power supply (automatic pre-storage), or it can be connected to the power supply after the normally open button (manual pre-storage).
3) If the user proposes, terminals #6 to #7 can output normally closed contacts.
4) Additional accessories are equipped by user.
5) When the working power of the electronic trip unit is DC power, a DC power module must be added (the #1 and #2 terminals cannot be connected to the AC power supply).
   DC power supply DC 110 V or 220 V is input from U1(+), U2(-), and the two output terminals of the DC power supply module are respectively connected to the secondary terminal block terminals 1(+) and 2(-).

Abbreviation	Meaning	Abbreviation	Meaning
SB1	Shunt button (equipped by user)	DF	Auxiliary contact
SB2	Under-voltage button (equipped by user)	F	Shunt release
SB3	Switching on button	SA	Motor micro operation switch
X	Closing electromagnet	Q	Under-voltage release or under-voltage time delay release
M	Motorized operating mechanism	O	Normal opening contact (3 A/AC 380 V)
XT	Terminal	⊗	Signal light (User prepares)

Other wiring of the intelligent controller
#1, #2 AC working power input (input from DC power modules U1, U2 during DC)
#25, #26 External neutral or ground current transformer input #25, #26

Diagram

H type

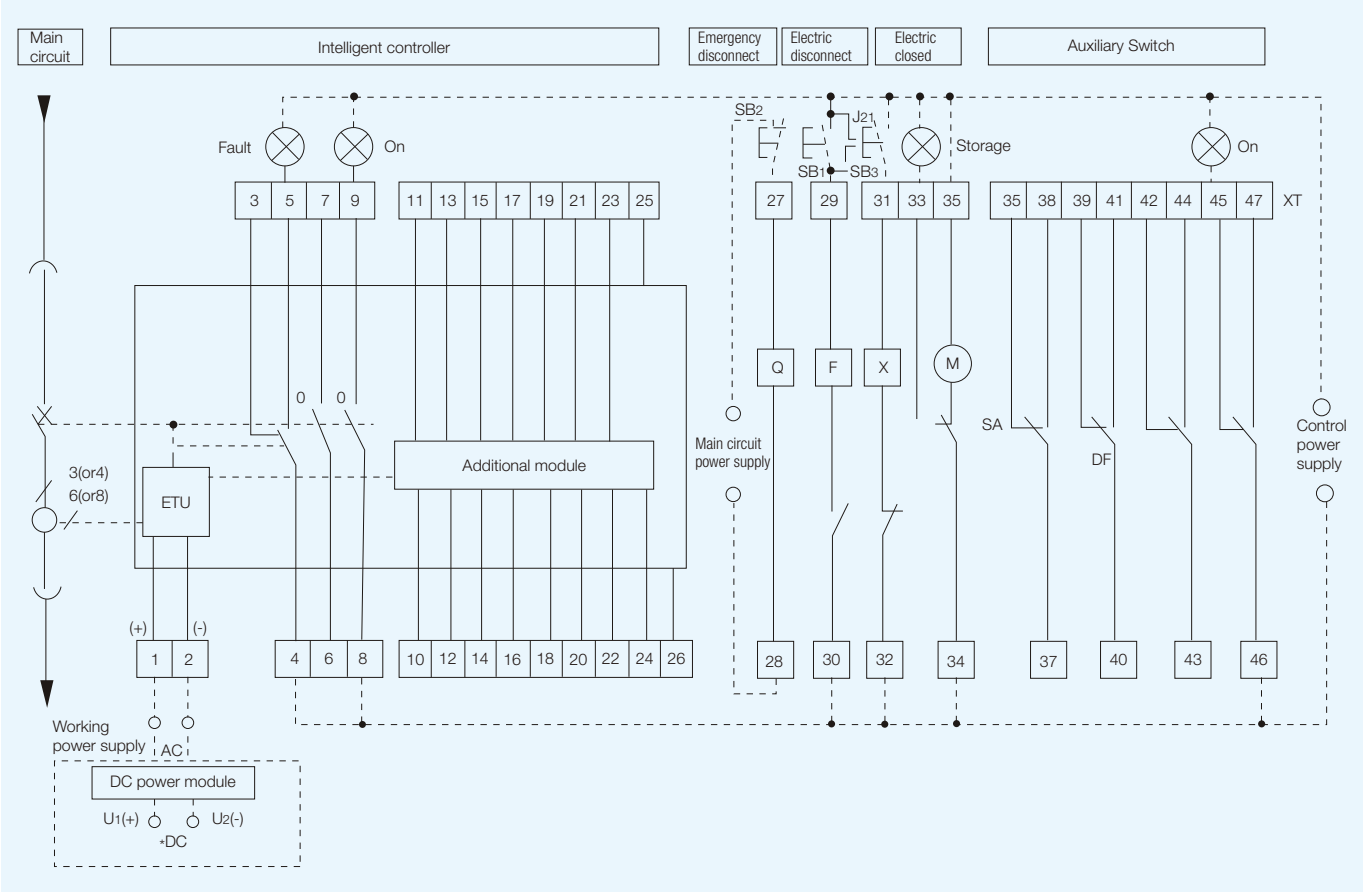

1. The electronic trip unit signal output drives the external relay J through the terminals 12-18, 20, 21 to output the external contact signal.
2. RS458/232 converter, DP module, and power transformer (users need to specify the input voltage value in the order) are provided by the manufacturer. The power transformer can be inserted into the standard rail together with the relay base, and the user can install it in the switch cabinet.
3. Relay model: HH62P, AC/DC 24 V, supplied by users.
4. Client station computer supplied by users.
5. The output of terminal 13-15 can be used as opening, closing and energy storage through communication's remote control. The trip signal of the corresponding terminal 14, 15 is no longer output at this time. The normal opening contact of the corresponding relay is connected with the specified manual control button. Parallel connection can realize remote control. If remote control function is not needed, the terminal 14 and 15 can connect two signal lights through the normal opening contacts of relays J14 and J15 to signals remotely. Please indicate in the order whether the user needs the remote control function. And the manufacturer determines the function of the terminals 14 and 15 according to the order. The relay J21 is for backup protection after the terminal 21 out the signal.
6. Self-diagnostic signal output conditions:
   a. electronic trip unit internal temperature > 80 °C
   b. chip does not work properly
   c. electronic trip unit loses power
7. Terminals J12, J14-16, J20 and J21 can be connected as per actual needs.

Notes:

7.1. If the control power supply voltages of F, X, and M are different, they should be connected to different power supplies.

7.2. Terminal #35 can be directly connected to the power supply (automatic pre-storage), or connected to the power supply after the normal opening button (manual pre-storage).

7.3. If the user requires, terminals #6 ~ #7 can be output normally closed contacts.

7.4. Additional accessories are provided by the user.

7.5. When the working power supply of the electronic trip unit is DC, a DC module must be equipped (the #1 and #2 terminals cannot be connected to the AC power supply). DC power supply DC 110 V or 220 V input from U1 (+), U2 (1), the two output terminals of the DC are respectively connected to the secondary terminal block terminals 1 (+), 2 (-)

Diagram

H type

Abbreviation	Meaning	Abbreviation	Meaning
SB1	Shunt button (equipped by user)	DF	Auxiliary contact
SB2	Under-voltage button (equipped by user)	F	Shunt release
SB3	Switching on button	SA	Motor micro operation switch
X	Closing electromagnet	Q	Under-voltage release or under-voltage time delay release
M	Motorized operating mechanism	O	Normal opening contact (3 A/AC 380 V)
XT	Terminal	⊗	Signal light (User prepares)

Other wiring of intelligent controller
#1, #2: AC working current input (Input from DC power modules U1, U2)
#10: RS485 communication P terminal (simplex) remote adjustment and communication
#11: RS485 communication N terminal (simplex) remote control and test, etc.
#12: Overload pre-alarm signal output
#13: Communication remote control shunt release output
#14: Instantaneous short delay trip signal output or communication remote control closing output
#15: Long delay trip signal output or communication remote energy storage output
#16: Ground (or Neutral) Fault trip signal output
#17: Unloading 1 signal output
#18: Unloading 2 signal output
#19: Signal output public line
#20: Self-diagnostic signal output
#21: Trip signal (for shunt or under voltage actuators)
#22: Voltage singnal phase-A
#23: Voltage singnal phase-B
#24: Voltage singnal phase-C
#25, #26: External neutral or ground current transformer input

Relay for additional functions

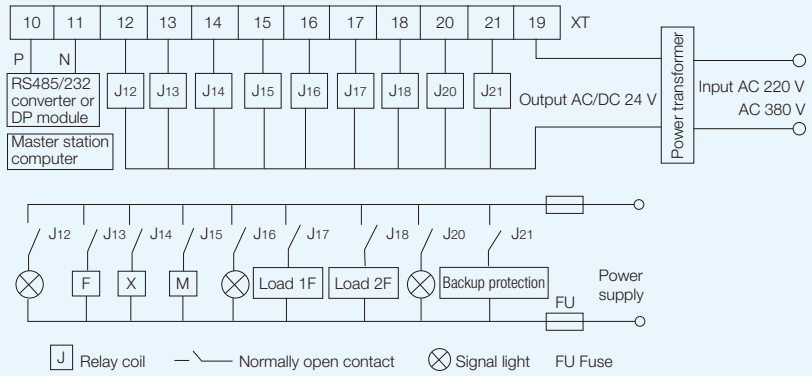

3

Overload protection characteristics

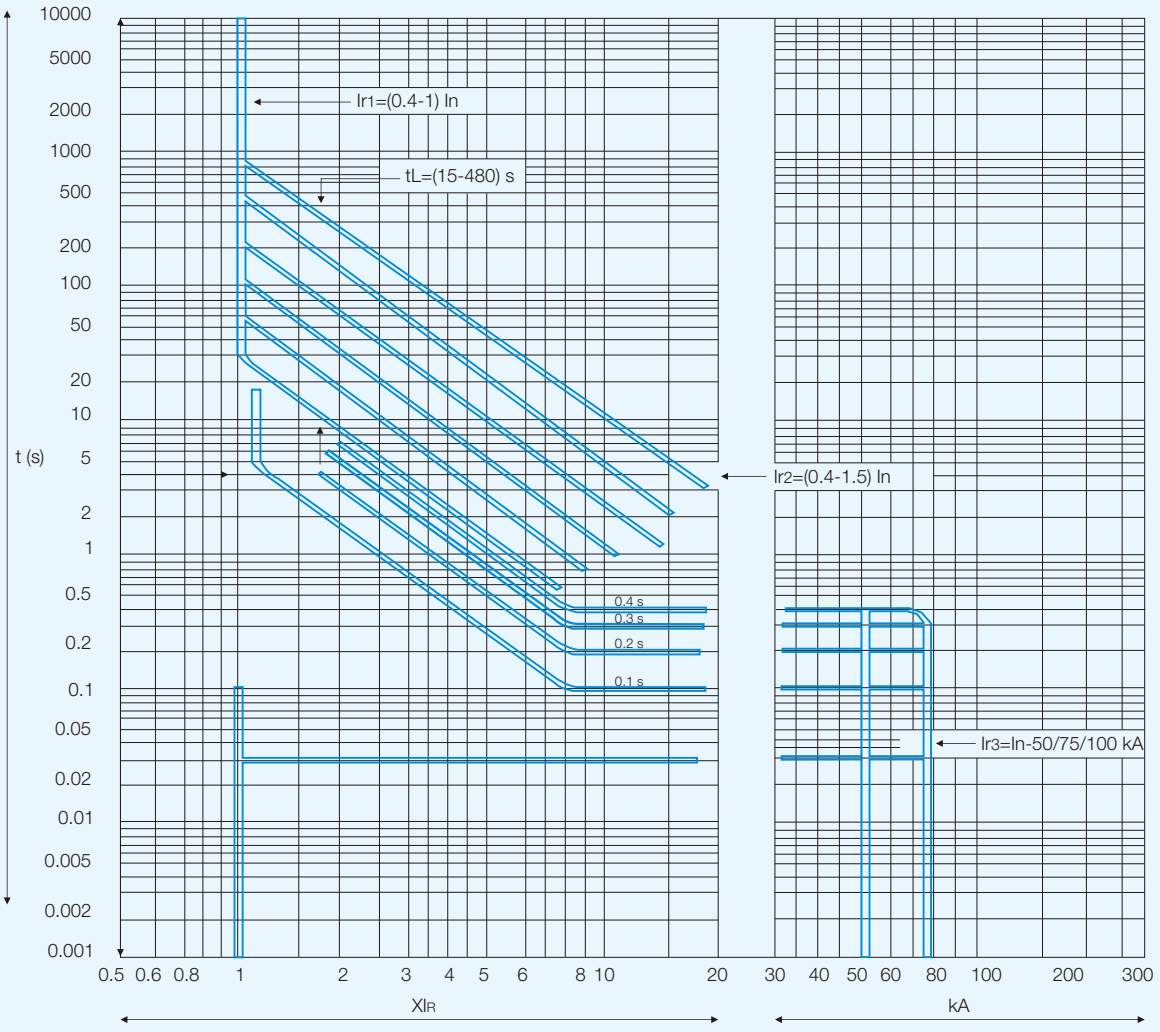

Ground-fault protection characteristics

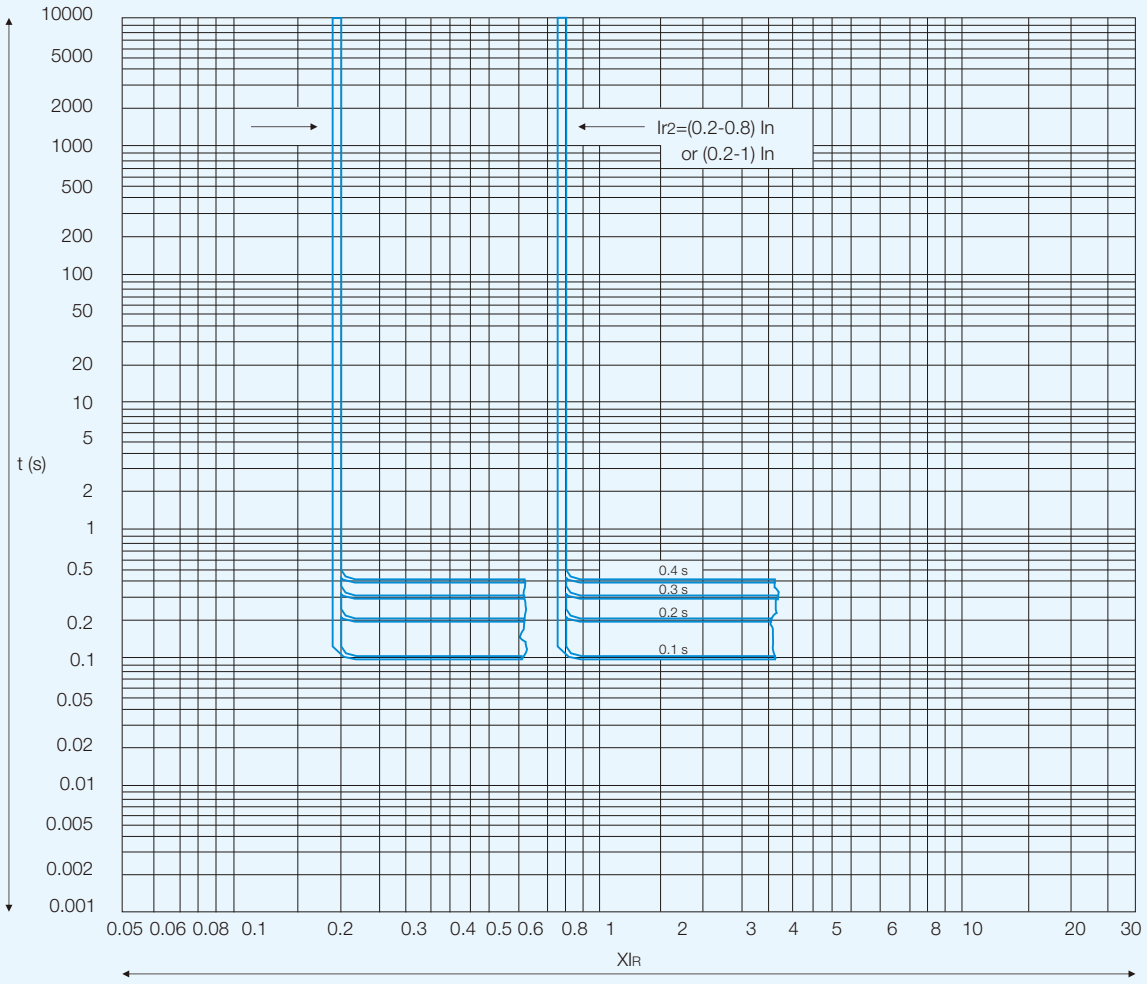

3

Load monitoring (Inverse time)

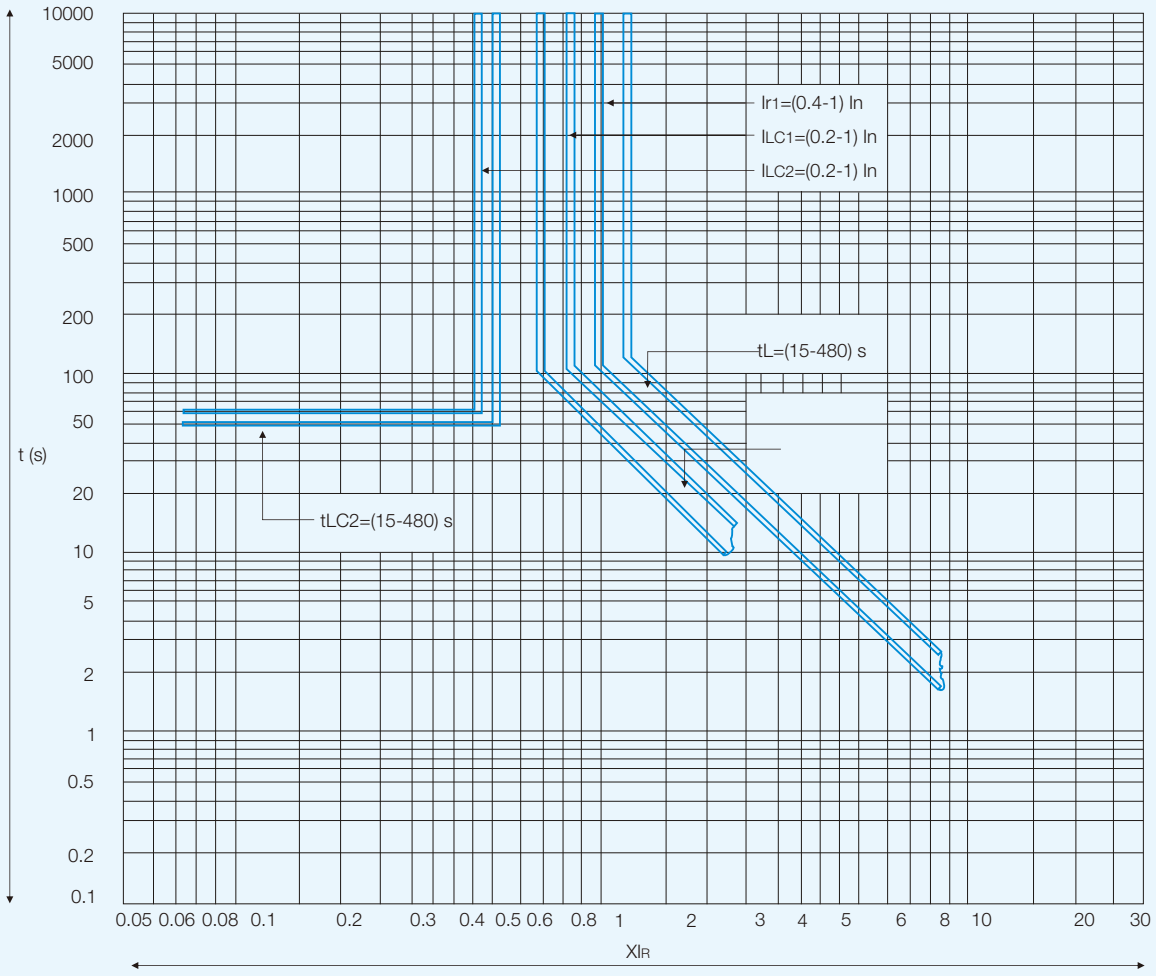

Load monitoring (Definite time)

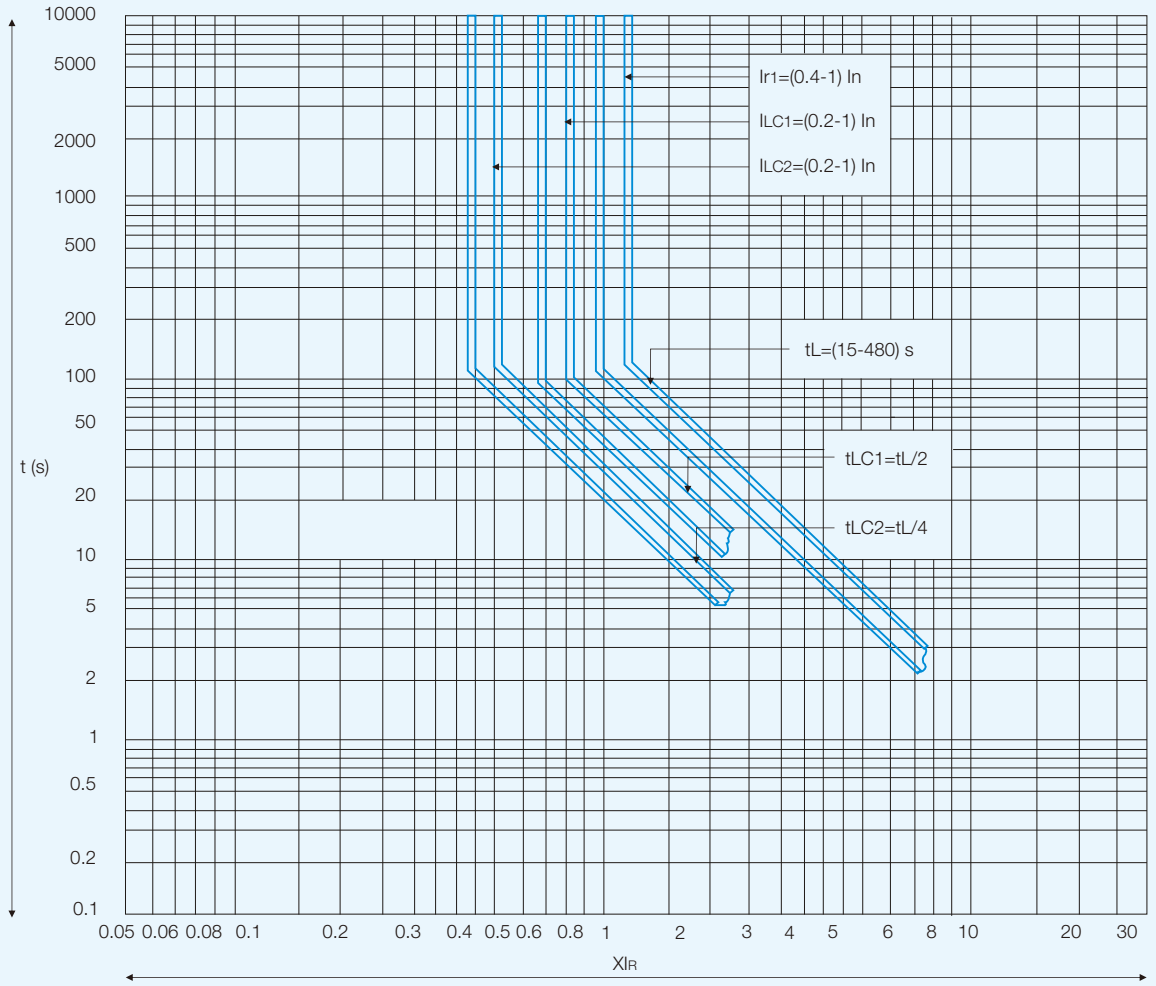

Operating performance

Size	Operation cycle number
VA5120	10000
VA5132, VA5140	5000
VA5163	2000

Accessories for circuit breakers

Rated votlage and power

Accessories		AC (50 Hz)		DC	
		220 V	380 V	110 V	220 V
Shunt release		24 W	36 W	24 W	24 W
Under voltage release		24 W	36 W	-	-
Closing coil		24 W	36 W	24 W	24 W
Motorized operating mechanism	VA5120	85 W	85 W	85 W	85 W
	VA5132, VA5140	110 W	110 W	110 W	110 W
	VA5163	150 W	150 W	150 W	150 W

Note: The reliable operating voltage range of the shunt release is 70% ~ 110%, and the closing coil and motorized operating mechanism are 85% ~110%.

Undervoltage release

Category		Time-delay type	Instantaneous type
Action time		Delay 1, 3, 5 seconds	Instantaneous
Action voltage range	35% ~ 70% Ue	Circuit breaker open reliably	
	≤ 35% Ue	Circuit breaker can not be closed	
	(85% ~ 110%) Ue	Circuit breaker can be closed reliably	
Within the 1/2 delay time, if the voltage returns to 85% Ue		Circuit breaker keep closed	-

Note: Delay time accuracy ±10%

Accessories for circuit breaker

Auxiliary contact

- The conventional thermal current of the auxiliary contact is 6 A.
- The form of the auxiliary contacts: four normally open four normally closed.

Auxiliary contact's ability to switch on and off under normal conditions

Usage category	On			Off		
	I/Ie	U/Ue	cosØ or T0.95	I/Ie	U/Ue	cosØ or T0.95
AC-15	10	1	0.3	10	1	0.3
DC-16	1	1	6 Pe	1	1	6 Pe

Abnormal contact and breaking capacity of auxiliary contacts

Usage category	On			Off			On and off operation cycle number and operating frequency		
	I/Ie	U/Ue	cosØ or T0.95	I/Ie	U/Ue	cosØ or T0.95	Number of operating cycles	Number of operating cycles per minute	Power-on time
AC-15	10	1.1	0.3	10	1.1	0.3		6 (or the same frequency as the primary loop)	0.05
DC-16	1.1	1.1	6 Pe	1.1	1.1	6 Pe			

Note: When Pe ≥ 50 W. T 0.95 upper limit = 6 Pe ≤ 300 Ms

Disconnect position key lock

The circuit breaker has an "off position key lock" accessory (available on request) that locks the circuit breaker in the open position. At this time, the circuit breaker cannot be switched-on regardless of whether the closing button or the energizing (closing) electromagnet is used.

Accessories for circuit breaker

Mechanical interlock

Suitable for withdrawable type and fixed type, to enable various opening and closing configurations to be obtained between two or three circuit breakers.

Connecting rod type

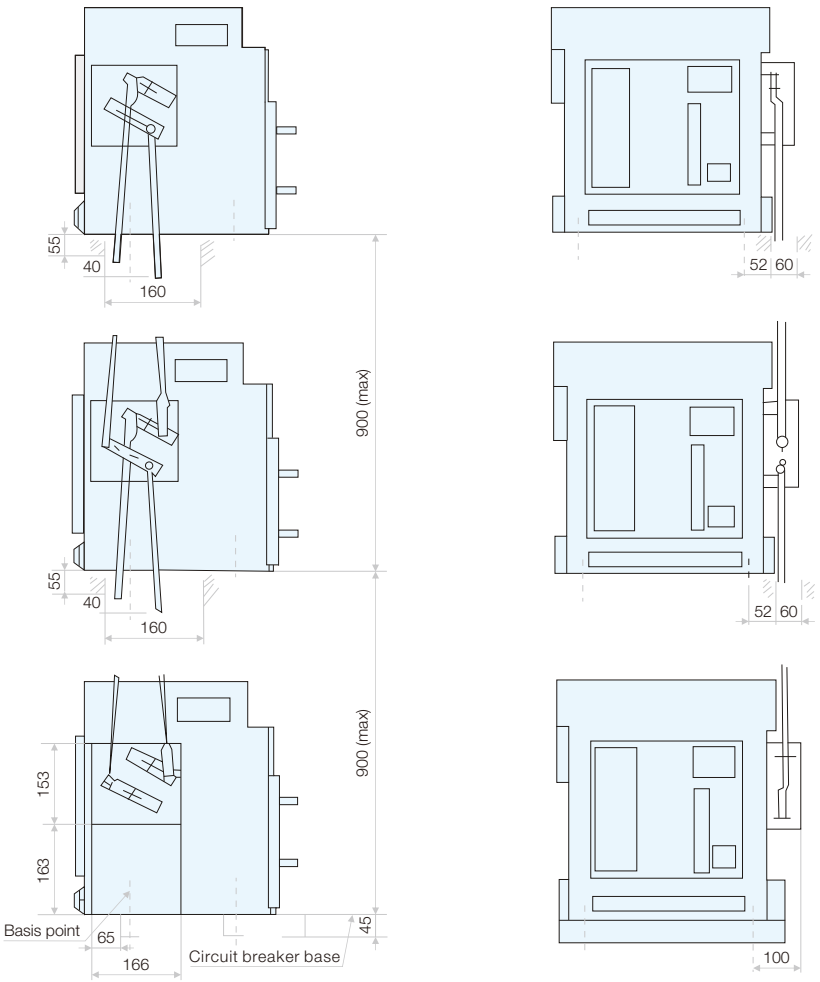

Cable type

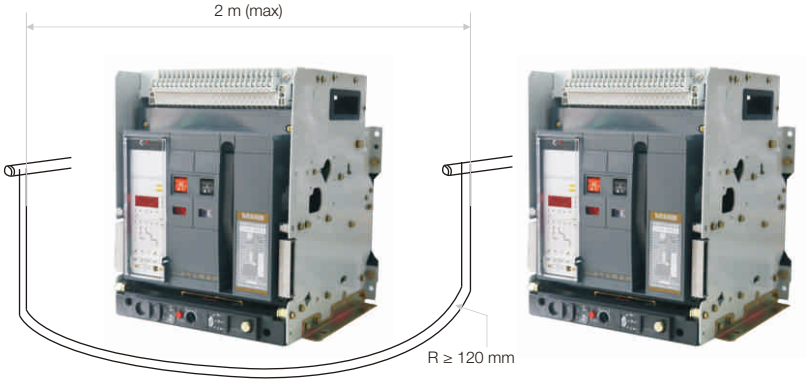

Copper bar specification, quantity

Rated frame current In (A)	Connection copper bar specification	Qty/pole	Rated current In (A)	Connection copper bar specification	Qty/pole
630 A	40x5	2	2900 A	100x10	3
800 A	50x5	2	3200 A	120x10	3
1000 A	60x5	2	3600 A	120x10	4
1250 A	80x5	2	4000 A	120x10	4
1600 A	100x5	2	5000 A	120x10	5
2000 A	100x5	3	6300 A	120x10	6
2500 A	100x5	4			

Selection and ordering data

	Number of poles	Rated current In A	Fixed version Type code	Withdrawable version Type code
VA5120	Equipped with type M electronic trip unit			
	3-pole	400	VA5120-3F-MD400	VA5120-3D-MD400
		630	VA5120-3F-MD630	VA5120-3D-MD630
		800	VA5120-3F-MD800	VA5120-3D-MD800
		1000	VA5120-3F-MD1000	VA5120-3D-MD1000
		1250	VA5120-3F-MD1250	VA5120-3D-MD1250
		1600	VA5120-3F-MD1600	VA5120-3D-MD1600
		2000	VA5120-3F-MD2000	VA5120-3D-MD2000
	4-pole	400	VA5120-4F-MD400	VA5120-4D-MD400
		630	VA5120-4F-MD630	VA5120-4D-MD630
		800	VA5120-4F-MD800	VA5120-4D-MD800
		1000	VA5120-4F-MD1000	VA5120-4D-MD1000
		1250	VA5120-4F-MD1250	VA5120-4D-MD1250
		1600	VA5120-4F-MD1600	VA5120-4D-MD1600
		2000	VA5120-4F-MD2000	VA5120-4D-MD2000
	Equipped with type M electronic trip unit, LCD display			
	3-pole	400	VA5120-3F-ML400	VA5120-3D-ML400
		630	VA5120-3F-ML630	VA5120-3D-ML630
		800	VA5120-3F-ML800	VA5120-3D-ML800
		1000	VA5120-3F-ML1000	VA5120-3D-ML1000
		1250	VA5120-3F-ML1250	VA5120-3D-ML1250
		1600	VA5120-3F-ML1600	VA5120-3D-ML1600
		2000	VA5120-3F-ML2000	VA5120-3D-ML2000
	4-pole	400	VA5120-4F-ML400	VA5120-4D-ML400
		630	VA5120-4F-ML630	VA5120-4D-ML630
		800	VA5120-4F-ML800	VA5120-4D-ML800
		1000	VA5120-4F-ML1000	VA5120-4D-ML1000
		1250	VA5120-4F-ML1250	VA5120-4D-ML1250
		1600	VA5120-4F-ML1600	VA5120-4D-ML1600
		2000	VA5120-4F-ML2000	VA5120-4D-ML2000
	Equipped with type H electronic trip unit			
	3-pole	400	VA5120-3F-H400	VA5120-3D-H400
		630	VA5120-3F-H630	VA5120-3D-H630
		800	VA5120-3F-H800	VA5120-3D-H800
		1000	VA5120-3F-H1000	VA5120-3D-H1000
		1250	VA5120-3F-H1250	VA5120-3D-H1250
		1600	VA5120-3F-H1600	VA5120-3D-H1600
		2000	VA5120-3F-H2000	VA5120-3D-H2000
	4-pole	400	VA5120-4F-H400	VA5120-4D-H400
		630	VA5120-4F-H630	VA5120-4D-H630
		800	VA5120-4F-H800	VA5120-4D-H800
		1000	VA5120-4F-H1000	VA5120-4D-H1000
		1250	VA5120-4F-H1250	VA5120-4D-H1250
		1600	VA5120-4F-H1600	VA5120-4D-H1600
		2000	VA5120-4F-H2000	VA5120-4D-H2000

The standard circuit breakers are equipped with:
Shunt release
Closing coil
Motorized operating mechanism
Auxiliary contact (4 convertible contact)
Horizontal terminals
Separators
Door frame

Selection and ordering data

	Number of poles	Rated current In A	Fixed version Type code	Withdrawable version Type code
VA5132	Equipped with type M electronic trip unit			
	3-pole	2000	VA5132-3F-MD2000	VA5132-3D-MD2000
		2500	VA5132-3F-MD2500	VA5132-3D-MD2500
		2900	VA5132-3F-MD2900	VA5132-3D-MD2900
		3200	VA5132-3F-MD3200	VA5132-3D-MD3200
	4-pole	2000	VA5132-4F-MD2000	VA5132-4D-MD2000
		2500	VA5132-4F-MD2500	VA5132-4D-MD2500
		2900	VA5132-4F-MD2900	VA5132-4D-MD2900
		3200	VA5132-4F-MD3200	VA5132-4D-MD3200
	Equipped with type M electronic trip unit, LCD display			
	3-pole	2000	VA5132-3F-ML2000	VA5132-3D-ML2000
		2500	VA5132-3F-ML2500	VA5132-3D-ML2500
		2900	VA5132-3F-ML2900	VA5132-3D-ML2900
		3200	VA5132-3F-ML3200	VA5132-3D-ML3200
	4-pole	2000	VA5132-4F-ML2000	VA5132-4D-ML2000
		2500	VA5132-4F-ML2500	VA5132-4D-ML2500
		2900	VA5132-4F-ML2900	VA5132-4D-ML2900
		3200	VA5132-4F-ML3200	VA5132-4D-ML3200
	Equipped with type H electronic trip unit			
	3-pole	2000	VA5132-3F-H2000	VA5132-3D-H2000
		2500	VA5132-3F-H2500	VA5132-3D-H2500
		2900	VA5132-3F-H2900	VA5132-3D-H2900
		3200	VA5132-3F-H3200	VA5132-3D-H3200
	4-pole	2000	VA5132-4F-H2000	VA5132-4D-H2000
		2500	VA5132-4F-H2500	VA5132-4D-H2500
		2900	VA5132-4F-H2900	VA5132-4D-H2900
		3200	VA5132-4F-H3200	VA5132-4D-H3200

Selection and ordering data

	Number of poles	Rated current In A	Withdrawable version Type code
VA5140	Equipped with type M electronic trip unit		
	3-pole	3200	VA5140-3D-MD3200
		3600	VA5140-3D-MD3600
		4000	VA5140-3D-MD4000
	4-pole	3200	VA5140-4D-MD3200
		3600	VA5140-4D-MD3600
		4000	VA5140-4D-MD4000
	Equipped with type M electronic trip unit, LCD display		
	3-pole	3200	VA5140-3D-ML3200
		3600	VA5140-3D-ML3600
		4000	VA5140-3D-ML4000
	4-pole	3200	VA5140-4D-ML3200
		3600	VA5140-4D-ML3600
		4000	VA5140-4D-ML4000
	Equipped with type H electronic trip unit		
	3-pole	3200	VA5140-3D-H3200
		3600	VA5140-3D-H3600
		4000	VA5140-3D-H4000
	4-pole	3200	VA5140-4D-H3200
		3600	VA5140-4D-H3600
		4000	VA5140-4D-H4000

Selection and ordering data

	Number of poles	Rated current In A	Withdrawable version Type code
VA5163	Equipped with type M electronic trip unit		
	3-pole	4000	VA5163-3D-MD4000
		5000	VA5163-3D-MD5000
		6300	VA5163-3D-MD6300
	4-pole	4000	VA5163-4D-MD4000
		5000	VA5163-4D-MD5000
		6300	VA5163-4D-MD6300
	Equipped with type M electronic trip unit, LCD display		
	3-pole	4000	VA5163-3D-ML4000
		5000	VA5163-3D-ML5000
		6300	VA5163-3D-ML6300
	4-pole	4000	VA5163-4D-ML4000
		5000	VA5163-4D-ML5000
		6300	VA5163-4D-ML6300
	Equipped with type H electronic trip unit		
	3-pole	4000	VA5163-3D-H4000
		5000	VA5163-3D-H5000
		6300	VA5163-3D-H6300
	4-pole	4000	VA5163-4D-H4000
		5000	VA5163-4D-H5000
		6300	VA5163-4D-H6300

3

Outline and installation dimensions

VA5120

Fixed type 3-pole/4-pole

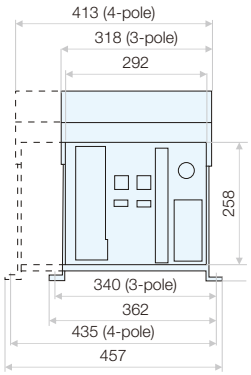

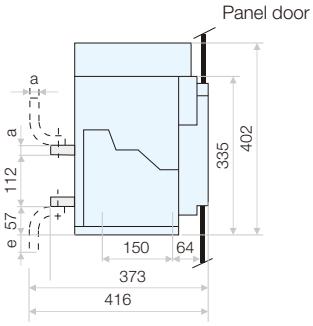

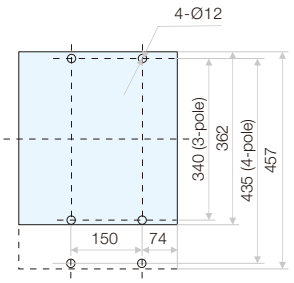

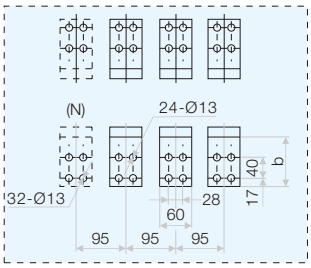

Vertical wiring

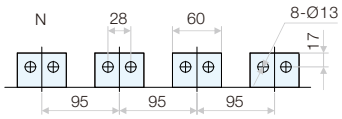

Horizontal wiring(default setting)

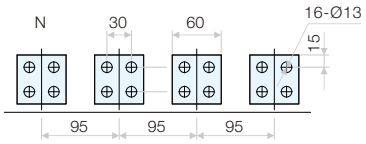

Horizontal extend wiring

In A	a mm	b mm	e mm
400-800 A	10	95	3
1000-1600 A	15	105	13
2000 A	20	115	23

Withdrawable type 3-pole/4-pole

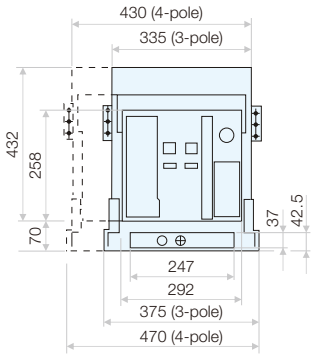

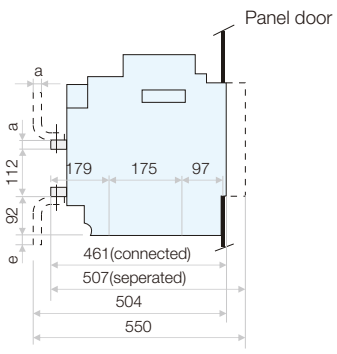

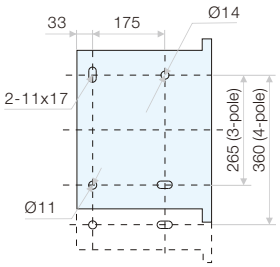

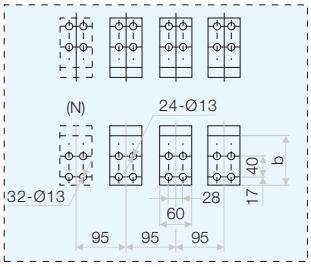

Vertical wiring

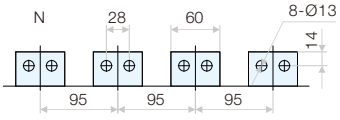

Horizontal wiring(default setting)

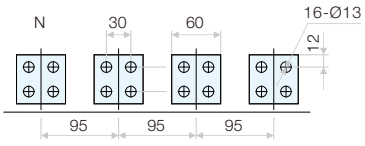

Horizontal extend wiring

In A	a mm	b mm	e mm
400-800 A	10	95	3
1000-1600 A	15	105	13
2000 A	20	115	23

Outline and installation dimensions

VA5132

Fixed type 3-pole/4-pole

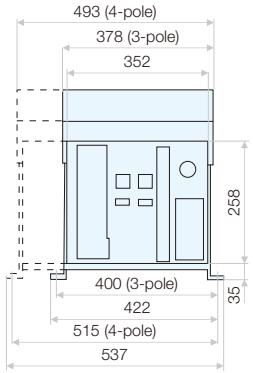

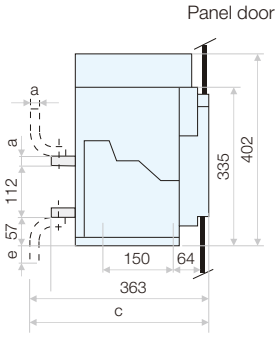

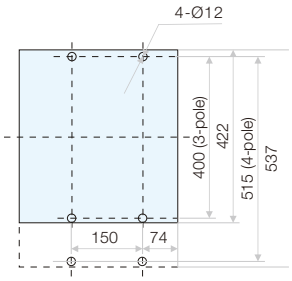

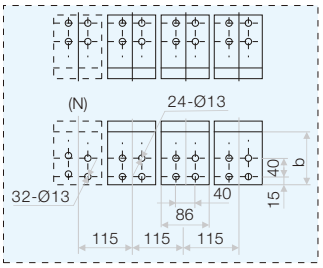

Vertical wiring

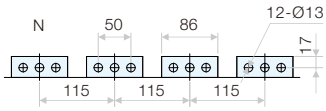

Horizontal wiring(default setting)

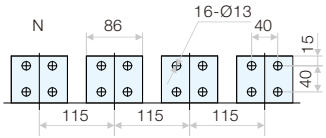

Horizontal extend wiring

In	a	b	c	d	e
A	mm	mm	mm	mm	mm
2000 A, 2500 A	20	115	206	552	23
2900 A, 3200 A	30	135	526	572	43

Withdrawable type 3-pole/4-pole

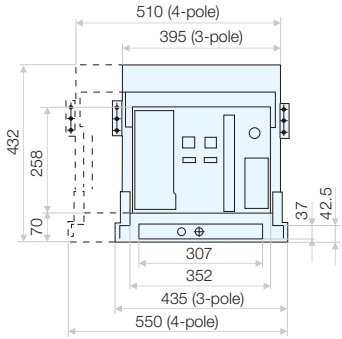

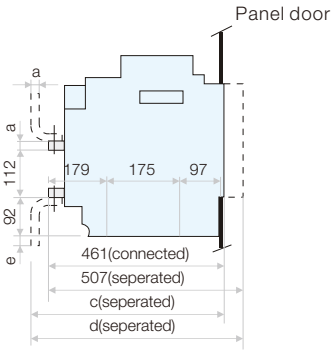

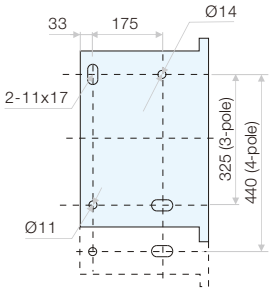

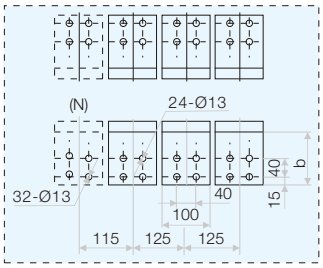

Vertical wiring

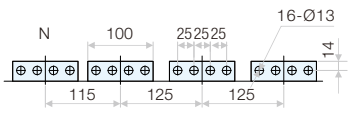

Horizontal wiring(default setting)

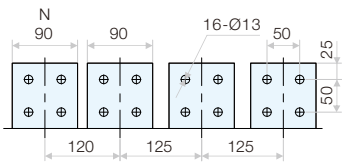

Horizontal extend wiring

In	a	b	c	e
A	mm	mm	mm	mm
2000 A, 2500 A	20	115	408	58
2900 A, 3200 A	30	135	428	78

3

Outline and installation dimensions

VA5140

Withdrawable type 3-pole

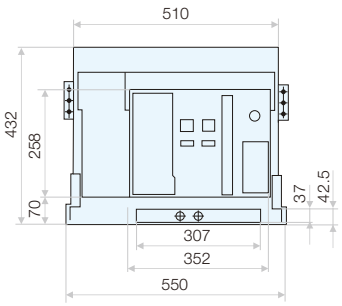

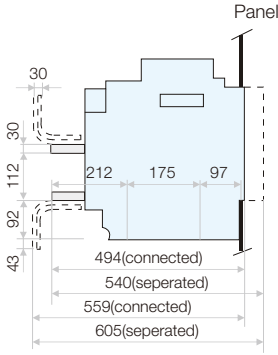

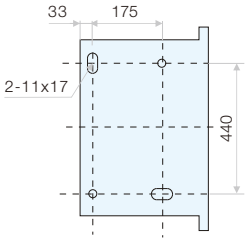

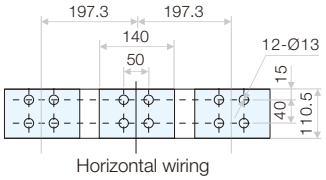

Note: Left and right size from panel center to circuit-breaker center is 57.5

Withdrawable type 4-pole

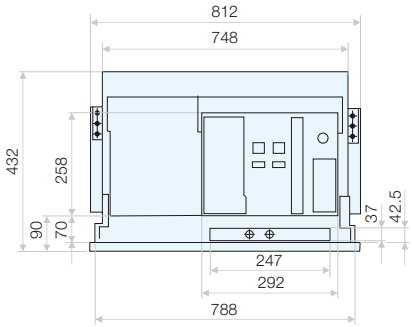

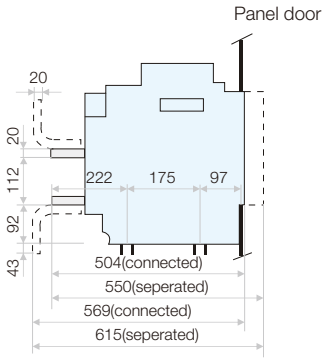

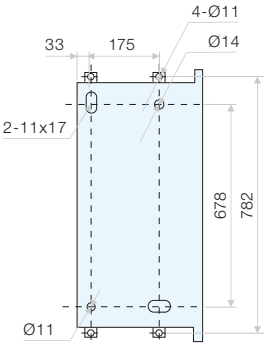

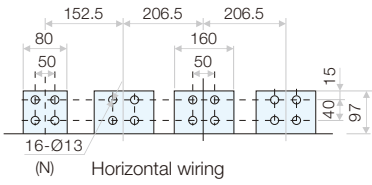

Note: Left and right size from panel center to circuit-breaker center is 206.5

Outline and installation dimensions

VA5163

Withdrawable type 4-pole (In=4000, 5000)

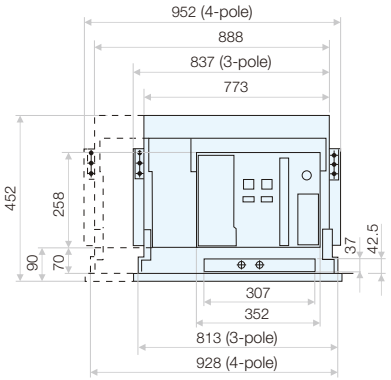

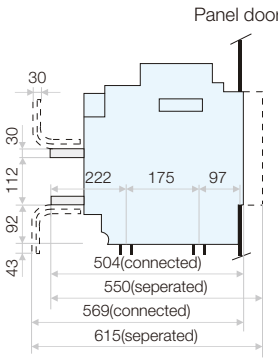

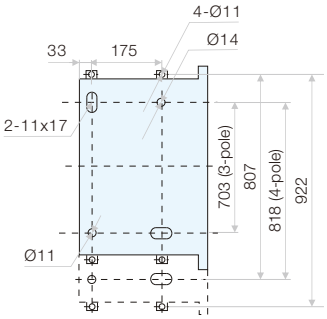

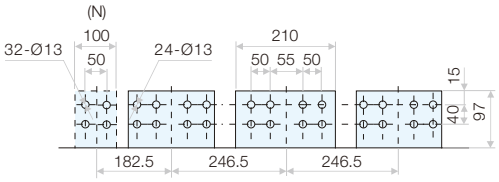

Horizontal wiring

Note: Left and right size from panel center to circuit-breaker center is 189 (Triple pole) 246.5 (Quadruple pole)

Withdrawable type 4-pole (In=6300)

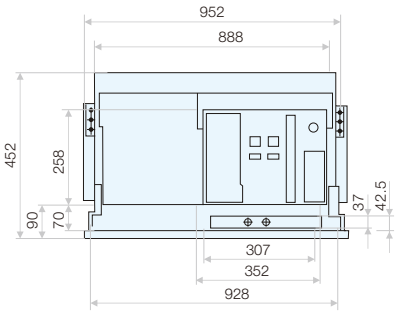

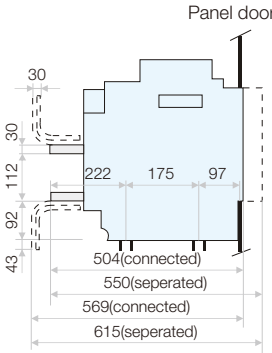

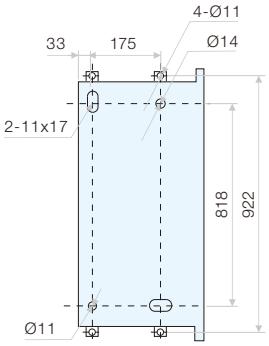

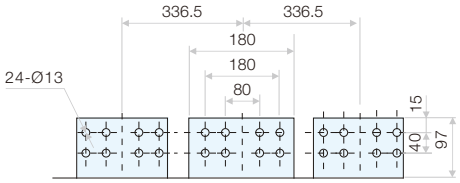

Horizontal wiring

Note: Left and right size from panel center to circuit-breaker center is 246.5

Outline and installation dimensions

Door drilling

Fixed type

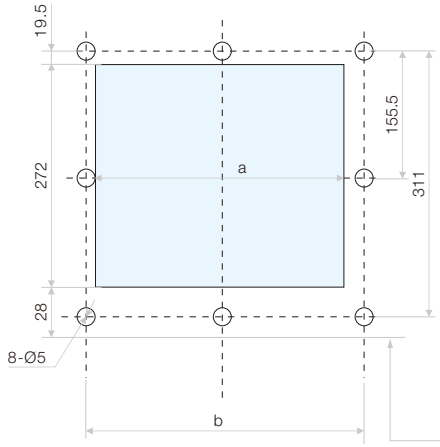

Withdrawable type

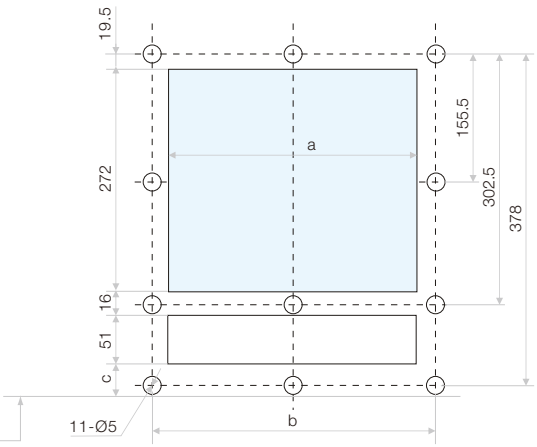

Circuit breaker base

Size	a mm	b mm	c mm
VA5120	306	345	0
VA5132, VA5140/3P	366	405	0
VA5140/4P	306	345	20
VA5163	366	405	20

Product Overview



- VM51 series moulded case circuit breaker is our new circuit breaker with international design and advanced manufacturing technology. It is applicable for infrequent conversion and motor protection under working condiction: rated insulation voltage 800 V (for type VM5100 - 500 V), rated impulse withstand voltage Uimp 8 kV (for type VM5100 - 6 kV), AC 50/60 Hz, rated working voltage 690 V and below (for type VM5100 - 400 V), rated working current up to 800 A . The circuit breaker has overload, short circuit and under voltage protection functions, which could protect circuit and power equipments from damage.
- The circuit breaker can be installed vertically or horizontally.
- The circuit breaker has isolation function, the corresponding symbols is: .
- The circuit breaker complies with the requirements of the standard IEC 60947-2.

Normal work and installation conditions

- Ambient temperature : -5 °C ~ +40 °C;
- The altitude of the installation site does not exceed 2000 m;
- Air conditions: Relative humidity not exceed 50 % at the max temperature of +40 °C, higher relative humidity is allowable under lower temperature, for example, RH could be 90 % at +20 °C. Special measures should be taken to occurrence of dews.
- Pollution grade: Grade 3;
- Installation category of main circuit: III, Installation category of auxiliary circuit and control circuit: II;
- The circuit breaker is available for electromagnetic environment A;
- Installed in an environment which is not enough to erode the metal or destroy the insulating gas and without explosive danger;
- Installed in an environment without attack from rain and snow.
- Storage conditions: -40 °C ~ +70 °C.

Technical date and performance

Type		VM5100		VM5101			VM5102			VM5104			VM5106			VM5108	
Number of poles		3		3, 4			3, 4			3, 4			3, 4			3, 4	
Class of breaking capacity		C	G	D	G	N	D	G	N	G	H	S	G	H	S	M	S
Frame current Inm (A)		63		125			250			400			630			800	
Rated current In (A)		10, 16, 20, 25, 32, 40, 50, 63		16, 20, 25, 32, 40, 50, 63, 80, 100, 125			100, 125, 140, 160, 180, 200, 225, 250			225, 250, 315 350, 400			400, 500, 630			630, 700, 800	
Rated operating voltage Ue (V)		400		400/690			400/690			400/690			400/690			400/690	
Rated ultimate short-circuit	400 V	25	50	35	50	80	35	50	80	50	65	100	50	65	100	75	100
breaking capacity, Icu (kA)	690 V	-	-	-	20	-	-	20	-	-	20	-	-	20	-	30	-
Rated operating short-circuit	400 V	18	35	22	35	50	22	35	50	35	42	65	35	42	65	50	65
breaking capacity, Ics (kA)	690 V	-	-	-	10	-	-	10	-	-	10	-	-	10	-	20	-
Mechanical life (times)		20000		20000			20000			10000			10000			10000	
Electrical life (times)		3000		3000			3000			2000			2000			2000	
Arcing distance (mm)		≤ 50		≤ 50			≤ 50			≤ 100			≤ 100			≤ 100	

Tripping Characteristic

For power distribution

Tripping current (A)	Thermo-magnetic release (ambient temperature +40 °C)		Operating current of electronic release (A)
	1.05 In (cold states) Conventional non-action time (h)	1.30 In (Right after test No. 1) Conventional action time (h)	
10 ≤ In ≤ 63	≥ 1	< 1	10 In ± 20 %
63 < In ≤ 100	≥ 2	< 2	10 In ± 20 %
100 < In ≤ 800	≥ 2	< 2	5 In ± 20 %, 10 In ± 20 %

Note: There is no 5 In electronic release in the 100 A, 125 A, 140 A breakers (VM5102).

For motor protection

Size	Thermo-magnetic release (ambient temperature +40 °C)					Operating current of electronic release (A)
	1.0 In (cold status) Conventional non-action time (h)	1.20 In (Right after test No. 1) Conventional action (h)	1.50 In (Right after test NO.1) Conventional action time	7.2 In (cold status) Conventional action time	Tripping level	
VM5100, VM5101, VM5102	≥ 2	< 2	≤ 4 min	4 s < Tp ≤ 10 s	10	12 In ± 20 %
VM5104, VM5106	≥ 2	< 2	≤ 8 min	6 s < Tp ≤ 20 s	20	12 In ± 20 %

Note: There is no motor protection type for VM5108.

Outline and installation dimensions

unit in mm

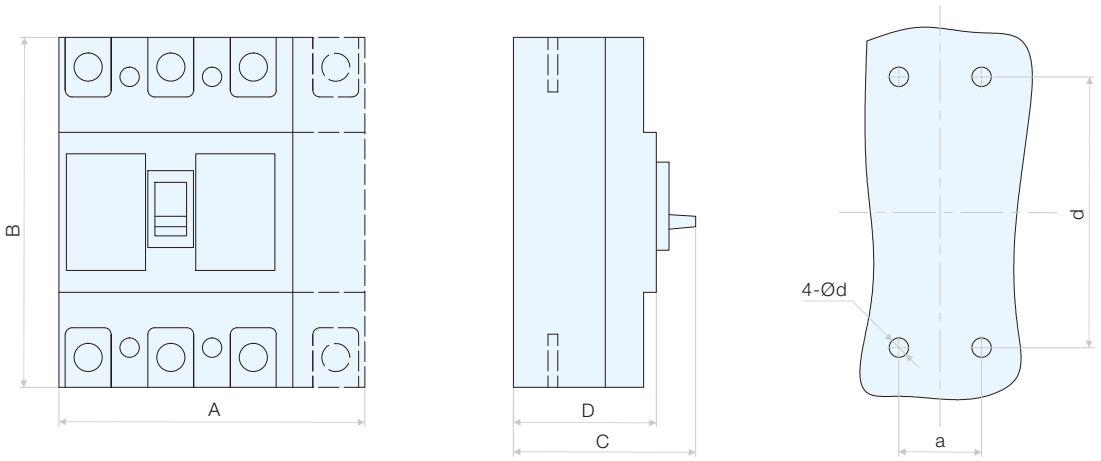

Model	Poles	Outline dimensions				Installation dimensions		
		A	B	C	D	a	b	Ød
	(P)	(mm)				(mm)		
VM5100C	3	78	135	90.5	73.5	25	117	3.5
VM5100G				98.5	81.5			
VM5100G	4	103				50		
VM5101D	3	92	150	86	68	30	129	4.5
VM5101G/VM5101N				104	86			
VM5101G	4	122				60		
VM5102D	3	107	165	110	86	35	126	4.5
VM5102G/VM5102N				127	103			
VM5102G	4	142				70		
VM5104G	3	150	257	146.5	106.5	44	194	7
VM5104H/VM5104S								
VM5104H	4	198				94		
VM5106G	3	182	270	150	110	58	200	7
VM5106H								
VM5106H	4	240				116		
VM5108M/VM5108S	3	210	280	155	115.5	70	243	7
VM5108M	4	280				140		

Selection and ordering data

3-pole

Breaking capacity at 400 V AC	Rated current (A)	For power distribution Type code	For motor protection Type code
C	10	VM5100C-3P-10	VM5100C-3M-10
25 kA	16	VM5100C-3P-16	VM5100C-3M-16
	20	VM5100C-3P-20	VM5100C-3M-20
	25	VM5100C-3P-25	VM5100C-3M-25
	32	VM5100C-3P-32	VM5100C-3M-32
	40	VM5100C-3P-40	VM5100C-3M-40
	50	VM5100C-3P-50	VM5100C-3M-50
	63	VM5100C-3P-63	VM5100C-3M-63
G	10	VM5100G-3P-10	VM5100G-3M-10
50 kA	16	VM5100G-3P-16	VM5100G-3M-16
	20	VM5100G-3P-20	VM5100G-3M-20
	25	VM5100G-3P-25	VM5100G-3M-25
	32	VM5100G-3P-32	VM5100G-3M-32
	40	VM5100G-3P-40	VM5100G-3M-40
	50	VM5100G-3P-50	VM5100G-3M-50
	63	VM5100G-3P-63	VM5100G-3M-63

4 pole - 3 trips

Breaking capacity at 400 V AC	Rated current (A)	For power distribution Type code	For motor protection Type code
Neutral unprotected			
G	10	VM5100G-4AP-10	VM5100G-4AM-10
50 kA	16	VM5100G-4AP-16	VM5100G-4AM-16
	20	VM5100G-4AP-20	VM5100G-4AM-20
	25	VM5100G-4AP-25	VM5100G-4AM-25
	32	VM5100G-4AP-32	VM5100G-4AM-32
	40	VM5100G-4AP-40	VM5100G-4AM-40
	50	VM5100G-4AP-50	VM5100G-4AM-50
	63	VM5100G-4AP-63	VM5100G-4AM-63
Neutral protected			
G	10	VM5100G-4DP-10	VM5100G-4DM-10
50 kA	16	VM5100G-4DP-16	VM5100G-4DM-16
	20	VM5100G-4DP-20	VM5100G-4DM-20
	25	VM5100G-4DP-25	VM5100G-4DM-25
	32	VM5100G-4DP-32	VM5100G-4DM-32
	40	VM5100G-4DP-40	VM5100G-4DM-40
	50	VM5100G-4DP-50	VM5100G-4DM-50
	63	VM5100G-4DP-63	VM5100G-4DM-63

4 pole - 4 trips

Breaking capacity at 400 V AC	Rated current (A)	For power distribution Type code	For motor protection Type code
Neutral unprotected			
G	10	VM5100G-4BP-10	VM5100G-4BM-10
50 kA	16	VM5100G-4BP-16	VM5100G-4BM-16
	20	VM5100G-4BP-20	VM5100G-4BM-20
	25	VM5100G-4BP-25	VM5100G-4BM-25
	32	VM5100G-4BP-32	VM5100G-4BM-32
	40	VM5100G-4BP-40	VM5100G-4BM-40
	50	VM5100G-4BP-50	VM5100G-4BM-50
	63	VM5100G-4BP-63	VM5100G-4BM-63
Neutral protected			
G	10	VM5100G-4CP-10	VM5100G-4CM-10
50 kA	16	VM5100G-4CP-16	VM5100G-4CM-16
	20	VM5100G-4CP-20	VM5100G-4CM-20
	25	VM5100G-4CP-25	VM5100G-4CM-25
	32	VM5100G-4CP-32	VM5100G-4CM-32
	40	VM5100G-4CP-40	VM5100G-4CM-40
	50	VM5100G-4CP-50	VM5100G-4CM-50
	63	VM5100G-4CP-63	VM5100G-4CM-63

Selection and ordering data

3-pole

Breaking capacity at 400 V AC	Rated current (A)	For power distribution Type code	For motor protection Type code
D	10	VM5101D-3P-10	VM5101D-3M-10
35 kA	16	VM5101D-3P-16	VM5101D-3M-16
	20	VM5101D-3P-20	VM5101D-3M-20
	25	VM5101D-3P-25	VM5101D-3M-25
	32	VM5101D-3P-32	VM5101D-3M-32
	40	VM5101D-3P-40	VM5101D-3M-40
	50	VM5101D-3P-50	VM5101D-3M-50
	63	VM5101D-3P-63	VM5101D-3M-63
	80	VM5101D-3P-80	VM5101D-3M-80
	100	VM5101D-3P-100	VM5101D-3M-100
	125	VM5101D-3P-125	VM5101D-3M-125
G	10	VM5101G-3P-10	VM5101G-3M-10
50 kA	16	VM5101G-3P-16	VM5101G-3M-16
	20	VM5101G-3P-20	VM5101G-3M-20
	25	VM5101G-3P-25	VM5101G-3M-25
	32	VM5101G-3P-32	VM5101G-3M-32
	40	VM5101G-3P-40	VM5101G-3M-40
	50	VM5101G-3P-50	VM5101G-3M-50
	63	VM5101G-3P-63	VM5101G-3M-63
	80	VM5101G-3P-80	VM5101G-3M-80
	100	VM5101G-3P-100	VM5101G-3M-100
	125	VM5101G-3P-125	VM5101G-3M-125
N	10	VM5101N-3P-10	VM5101N-3M-10
80 kA	16	VM5101N-3P-16	VM5101N-3M-16
	20	VM5101N-3P-20	VM5101N-3M-20
	25	VM5101N-3P-25	VM5101N-3M-25
	32	VM5101N-3P-32	VM5101N-3M-32
	40	VM5101N-3P-40	VM5101N-3M-40
	50	VM5101N-3P-50	VM5101N-3M-50
	63	VM5101N-3P-63	VM5101N-3M-63
	80	VM5101N-3P-80	VM5101N-3M-80
	100	VM5101N-3P-100	VM5101N-3M-100
	125	VM5101N-3P-125	VM5101N-3M-125

Selection and ordering data

4 pole - 3 trips

Breaking capacity at 400 V AC	Rated current (A)	For power distribution Type code	For motor protection Type code
Neutral unprotected			
G	10	VM5101G-4AP-10	VM5101G-4AM-10
50 kA	16	VM5101G-4AP-16	VM5101G-4AM-16
	20	VM5101G-4AP-20	VM5101G-4AM-20
	25	VM5101G-4AP-25	VM5101G-4AM-25
	32	VM5101G-4AP-32	VM5101G-4AM-32
	40	VM5101G-4AP-40	VM5101G-4AM-40
	50	VM5101G-4AP-50	VM5101G-4AM-50
	63	VM5101G-4AP-63	VM5101G-4AM-63
	80	VM5101G-4AP-80	VM5101G-4AM-80
	100	VM5101G-4AP-100	VM5101G-4AM-100
	125	VM5101G-4AP-125	VM5101G-4AM-125
Neutral protected			
G	10	VM5101G-4DP-10	VM5101G-4DM-10
50 kA	16	VM5101G-4DP-16	VM5101G-4DM-16
	20	VM5101G-4DP-20	VM5101G-4DM-20
	25	VM5101G-4DP-25	VM5101G-4DM-25
	32	VM5101G-4DP-32	VM5101G-4DM-32
	40	VM5101G-4DP-40	VM5101G-4DM-40
	50	VM5101G-4DP-50	VM5101G-4DM-50
	63	VM5101G-4DP-63	VM5101G-4DM-63
	80	VM5101G-4DP-80	VM5101G-4DM-80
	100	VM5101G-4DP-100	VM5101G-4DM-100
	125	VM5101G-4DP-125	VM5101G-4DM-125

4 pole - 4 trips

Breaking capacity at 400 V AC	Rated current (A)	For power distribution Type code	For motor protection Type code
Neutral unprotected			
G	10	VM5101G-4BP-10	VM5101G-4BM-10
50 kA	16	VM5101G-4BP-16	VM5101G-4BM-16
	20	VM5101G-4BP-20	VM5101G-4BM-20
	25	VM5101G-4BP-25	VM5101G-4BM-25
	32	VM5101G-4BP-32	VM5101G-4BM-32
	40	VM5101G-4BP-40	VM5101G-4BM-40
	50	VM5101G-4BP-50	VM5101G-4BM-50
	63	VM5101G-4BP-63	VM5101G-4BM-63
	80	VM5101G-4BP-80	VM5101G-4BM-80
	100	VM5101G-4BP-100	VM5101G-4BM-100
	125	VM5101G-4BP-125	VM5101G-4BM-125
Neutral protected			
G	10	VM5101G-4CP-10	VM5101G-4CM-10
50 kA	16	VM5101G-4CP-16	VM5101G-4CM-16
	20	VM5101G-4CP-20	VM5101G-4CM-20
	25	VM5101G-4CP-25	VM5101G-4CM-25
	32	VM5101G-4CP-32	VM5101G-4CM-32
	40	VM5101G-4CP-40	VM5101G-4CM-40
	50	VM5101G-4CP-50	VM5101G-4CM-50
	63	VM5101G-4CP-63	VM5101G-4CM-63
	80	VM5101G-4CP-80	VM5101G-4CM-80
	100	VM5101G-4CP-100	VM5101G-4CM-100
	125	VM5101G-4CP-125	VM5101G-4CM-125

Selection and ordering data

3-pole

Breaking capacity at 400 V AC	Rated current (A)	For power distribution Type code	For motor protection Type code
D	100	VM5102D-3P-100	VM5102D-3M-100
35 kA	125	VM5102D-3P-125	VM5102D-3M-125
	140	VM5102D-3P-140	VM5102D-3M-140
	160	VM5102D-3P-160	VM5102D-3M-160
	180	VM5102D-3P-180	VM5102D-3M-180
	200	VM5102D-3P-200	VM5102D-3M-200
	225	VM5102D-3P-225	VM5102D-3M-225
	250	VM5102D-3P-250	VM5102D-3M-250
G	100	VM5102G-3P-100	VM5102G-3M-100
50 kA	125	VM5102G-3P-125	VM5102G-3M-125
	140	VM5102G-3P-140	VM5102G-3M-140
	160	VM5102G-3P-160	VM5102G-3M-160
	180	VM5102G-3P-180	VM5102G-3M-180
	200	VM5102G-3P-200	VM5102G-3M-200
	225	VM5102G-3P-225	VM5102G-3M-225
	250	VM5102G-3P-250	VM5102G-3M-250
N	100	VM5102N-3P-100	VM5102N-3M-100
80 kA	125	VM5102N-3P-125	VM5102N-3M-125
	140	VM5102N-3P-140	VM5102N-3M-140
	160	VM5102N-3P-160	VM5102N-3M-160
	180	VM5102N-3P-180	VM5102N-3M-180
	200	VM5102N-3P-200	VM5102N-3M-200
	225	VM5102N-3P-225	VM5102N-3M-225
	250	VM5102N-3P-250	VM5102N-3M-250

4 pole - 3 trips

Breaking capacity at 400 V AC	Rated current (A)	For power distribution Type code	For motor protection Type code
Neutral unprotected			
G	100	VM5102G-4AP-100	VM5102G-4AM-100
50 kA	125	VM5102G-4AP-125	VM5102G-4AM-125
	140	VM5102G-4AP-140	VM5102G-4AM-140
	160	VM5102G-4AP-160	VM5102G-4AM-160
	180	VM5102G-4AP-180	VM5102G-4AM-180
	200	VM5102G-4AP-200	VM5102G-4AM-200
	225	VM5102G-4AP-225	VM5102G-4AM-225
	250	VM5102G-4AP-250	VM5102G-4AM-250
Neutral protected			
G	100	VM5102G-4DP-100	VM5102G-4DM-100
50 kA	125	VM5102G-4DP-125	VM5102G-4DM-125
	140	VM5102G-4DP-140	VM5102G-4DM-140
	160	VM5102G-4DP-160	VM5102G-4DM-160
	180	VM5102G-4DP-180	VM5102G-4DM-180
	200	VM5102G-4DP-200	VM5102G-4DM-200
	225	VM5102G-4DP-225	VM5102G-4DM-225
	250	VM5102G-4DP-250	VM5102G-4DM-250

4 pole - 4 trips

Icu (kA)	Rated current (A)	For power distribution Type code	For motor protection Type code
Neutral unprotected			
G	100	VM5102G-4BP-100	VM5102G-4BM-100
50 kA	125	VM5102G-4BP-125	VM5102G-4BM-125
	140	VM5102G-4BP-140	VM5102G-4BM-140
	160	VM5102G-4BP-160	VM5102G-4BM-160
	180	VM5102G-4BP-180	VM5102G-4BM-180
	200	VM5102G-4BP-200	VM5102G-4BM-200
	225	VM5102G-4BP-225	VM5102G-4BM-225
	250	VM5102G-4BP-250	VM5102G-4BM-250
Neutral protected			
G	100	VM5102G-4CP-100	VM5102G-4CM-100
50 kA	125	VM5102G-4CP-125	VM5102G-4CM-125
	140	VM5102G-4CP-140	VM5102G-4CM-140
	160	VM5102G-4CP-160	VM5102G-4CM-160
	180	VM5102G-4CP-180	VM5102G-4CM-180
	200	VM5102G-4CP-200	VM5102G-4CM-200
	225	VM5102G-4CP-225	VM5102G-4CM-225
	250	VM5102G-4CP-250	VM5102G-4CM-250

Selection and ordering data

3-pole

Breaking capacity at 400 V AC	Rated current (A)	For power distribution Type code	For motor protection Type code
G	225	VM5104G-3P-225	VM5104G-3M-225
50 kA	250	VM5104G-3P-250	VM5104G-3M-250
	315	VM5104G-3P-315	VM5104G-3M-315
	350	VM5104G-3P-350	VM5104G-3M-350
	400	VM5104G-3P-400	VM5104G-3M-400
H	225	VM5104H-3P-225	VM5104H-3M-225
65 kA	250	VM5104H-3P-250	VM5104H-3M-250
	315	VM5104H-3P-315	VM5104H-3M-315
	350	VM5104H-3P-350	VM5104H-3M-350
	400	VM5104H-3P-400	VM5104H-3M-400
S	225	VM5104S-3P-225	VM5104S-3M-225
100 kA	250	VM5104S-3P-250	VM5104S-3M-250
	315	VM5104S-3P-315	VM5104S-3M-315
	350	VM5104S-3P-350	VM5104S-3M-350
	400	VM5104S-3P-400	VM5104S-3M-400

4 pole - 3 trips

Breaking capacity at 400 V AC	Rated current (A)	For power distribution Type code	For motor protection Type code
Neutral unprotected			
H	225	VM5104H-4AP-225	VM5104H-4AM-225
65 kA	250	VM5104H-4AP-250	VM5104H-4AM-250
	315	VM5104H-4AP-315	VM5104H-4AM-315
	350	VM5104H-4AP-350	VM5104H-4AM-350
	400	VM5104H-4AP-400	VM5104H-4AM-400
Neutral protected			
H	225	VM5104H-4DP-225	VM5104H-4DM-225
65 kA	250	VM5104H-4DP-250	VM5104H-4DM-250
	315	VM5104H-4DP-315	VM5104H-4DM-315
	350	VM5104H-4DP-350	VM5104H-4DM-350
	400	VM5104H-4DP-400	VM5104H-4DM-400

4 pole - 4 trips

Breaking capacity at 400 V AC	Rated current (A)	For power distribution Type code	For motor protection Type code
Neutral unprotected			
H	225	VM5104H-4BP-225	VM5104H-4BM-225
65 kA	250	VM5104H-4BP-250	VM5104H-4BM-250
	315	VM5104H-4BP-315	VM5104H-4BM-315
	350	VM5104H-4BP-350	VM5104H-4BM-350
	400	VM5104H-4BP-400	VM5104H-4BM-400
Neutral protected			
H	225	VM5104H-4CP-225	VM5104H-4CM-225
65 kA	250	VM5104H-4CP-250	VM5104H-4CM-250
	315	VM5104H-4CP-315	VM5104H-4CM-315
	350	VM5104H-4CP-350	VM5104H-4CM-350
	400	VM5104H-4CP-400	VM5104H-4CM-400

Selection and ordering data

3-pole

Breaking capacity at 400 V AC	Rated current (A)	For power distribution Type code	For motor protection Type code
G	400	VM5106G-3P-400	VM5106G-3M-400
50 kA	500	VM5106G-3P-500	VM5106G-3M-500
	630	VM5106G-3P-630	VM5106G-3M-630
H	400	VM5106H-3P-400	VM5106H-3M-400
65 kA	500	VM5106H-3P-500	VM5106H-3M-500
	630	VM5106H-3P-630	VM5106H-3M-630
S	400	VM5106S-3P-400	VM5106S-3M-400
100 kA	500	VM5106S-3P-500	VM5106S-3M-500
	630	VM5106S-3P-630	VM5106S-3M-630

4 pole - 3 trips

Breaking capacity at 400 V AC	Rated current (A)	For power distribution Type code	For motor protection Type code
Without neutral protection			
H	400	VM5106H-4AP-400	VM5106H-4AM-400
65 kA	500	VM5106H-4AP-500	VM5106H-4AM-500
	630	VM5106H-4AP-630	VM5106H-4AM-630
With neutral protection			
H	400	VM5106H-4DP-400	VM5106H-4DM-400
65 kA	500	VM5106H-4DP-500	VM5106H-4DM-500
	630	VM5106H-4DP-630	VM5106H-4DM-630

4 pole - 4 trips

Breaking capacity at 400 V AC	Rated current (A)	For power distribution Type code	For motor protection Type code
Without neutral protection			
H	400	VM5106H-4BP-400	VM5106H-4BM-400
65 kA	500	VM5106H-4BP-500	VM5106H-4BM-500
	630	VM5106H-4BP-630	VM5106H-4BM-630
With neutral protection			
H	400	VM5106H-4CP-400	VM5106H-4CM-400
65 kA	500	VM5106H-4CP-500	VM5106H-4CM-500
	630	VM5106H-4CP-630	VM5106H-4CM-630

Selection and ordering data

3-pole

Breaking capacity at 400 V AC	Rated current (A)	For power distribution Type code	For motor protection Type code
M	630	VM5108M-3P-630	-
75 kA	700	VM5108M-3P-700	-
	800	VM5108M-3P-800	-
S	630	VM5108S-3P-630	-
100 kA	700	VM5108S-3P-700	-
	800	VM5108S-3P-800	-

4 pole - 3 trips

Breaking capacity at 400 V AC	Rated current (A)	For power distribution Type code	For motor protection Type code
Neutral unprotected			
M	630	VM5108M-4AP-630	-
75 kA	700	VM5108M-4AP-700	-
	800	VM5108M-4AP-800	-
Neutral protected			
M	630	VM5108M-4DP-630	-
75 kA	700	VM5108M-4DP-700	-
	800	VM5108M-4DP-800	-

4 pole - 4 trips

Breaking capacity at 400 V AC	Rated current (A)	For power distribution Type code	For motor protection Type code
Neutral unprotected			
M	630	VM5108M-4BP-630	-
75 kA	700	VM5108M-4BP-700	-
	800	VM5108M-4BP-800	-
Neutral protected			
M	630	VM5108M-4CP-630	-
75 kA	700	VM5108M-4CP-700	-
	800	VM5108M-4CP-800	-

Moulded Case Circuit Breakers
Series VM51E

Product description



- VM51E Series electronic Moulded Case Circuit Breakers Hereinafter referred to as (breaker), Suitable for AC 50/60 Hz, rated insulation voltage is 800 V, rated working voltage 690V and below, rated operating current to 800 A, in the circuit Infrequent conversion and infrequent starting of the motor. The breaker has overload long delay inverse time limit, short circuit short delay inverse time limit, short circuit short delay time limit, short circuit instantaneous and under voltage protection function, which can protect the line and power equipment from damage, and the circuit breaker protection characteristics are complete and accurate. It can improve the reliability of power supply and avoid unnecessary power off.
- The circuit breaker has the characteristics of small dimension, high breaking capacity, short arcing and anti-vibration.
- The circuit breaker can be installed vertically or horizontally.
- The circuit breaker has an isolation function, and the corresponding symbol is .
- The circuit breaker cannot be reversed into the line, that is, only 1.3.5 connected to the power line, and 2, 4, 6 connected to the load line.
- Standard: IEC 60947-2

Normal working conditions and installation conditions

- The ambient air temperature is -5 °C ~ + 40 °C;
- The altitude of the installation site does not exceed 2000 meters;
- The relative humidity of the air at the installation site does not exceed 50 % at a maximum temperature of + 40 °C, and may have a relatively high relative humidity at a lower temperature, for example, 90 % at 20 °C. Special measures should be taken for condensation that occasionally occurs due to temperature changes;
- Pollution degree is 3;
- The circuit breaker main circuit installation category is III, the remaining auxiliary circuits, the control circuit installation category is II;
- The circuit breaker is suitable for electromagnetic environment A;
- The circuit breaker shall be installed in a place where there is no danger of explosion and no conductive dust, no sufficient to corrode the metal and damage the insulation.
- The circuit breaker should be installed in a place where there is no rain or snow;
- Storage conditions: ambient air temperature is -40 °C ~ + 70 °C.

Technical date and performance

Type		VM51E01		VM51E02		VM51E04		VM51E08	
Number of poles (P)		3	4	3	4	3	4	3	4
Frame size rated current Inm (A)		100		250		400		630, 800	
Rated current In (A)		32 (12.5 ~ 32) 63 (25 ~ 63) 100 (40 ~ 100)		250 (100 ~ 250)		400 (160 ~ 400)		630 (250 ~ 630) 800 (315 ~ 800)	
Rated insulating voltage Ui (V)		AC 800		AC 800		AC 800		AC 800	
Rated impulsed withstand voltage Uimp (V)		8000		8000		8000		8000	
Rated operating voltage Ue (V) 50/60 Hz		AC 400		AC 400		AC 400		AC 400	
Flashover distance (mm)		≤ 50		≤ 50		≤ 100		≤ 100	
Rated ultimate short-circuit breaking capacity Icu (kA)		50		50		65		75	
Rated operating short-circuit breaking capacity Ics (kA)		35		35		42		50	
Rated short-time withstand current Icw (kA) / 1 s		-		-		5		10	
Use category		A		A		B		B	
Electrical life (times)		8000		8000		7500		7500	
Mechanical life (times)	Maintenance	20000		20000		10000		10000	
	Free maintenance	40000		40000		20000		20000	
Outline dimensions (mm)	Width	92	122	107	142	150	198	210	280
	Length	150		165		257		280	
	Height	92		90		106.5		115.5	

Protection characteristics

For power distribution

Protection function	Frame size	Rated current In (A)	Current setting (A)	Tripping characteristics / time
Overload long delay	VM51E01	32	Ir1 = 12.5-14-16-18-20-22-25-28-30-32	Press I^2t action 1.05 Ir1, No action within 2 h; 1.3 Ir1, Action within 1 h; 2Ir1, t1=(12-60-80-100)s (VM51E01, VM51E02) t1=(12-60-100-150)s (VM51E04, VM51E08)
		63	Ir1 = 25-28-32-36-40-45-50-56-60-63	
		100	Ir1 = 40-45-50-56-63-70-75-80-90-100	
	VM51E02	250	Ir1 = 100-112-125-140-150-160-180-200-225-250	
	VM51E04	400	Ir1 = 160-180-200-225-250-280-315-350-375-400	
	VM51E08	630	Ir1 = 250-280-315-350-375-400-450-500-560-630	
		800	Ir1 = 315-350-400-450-500-560-630-700-760-800	
Action tolerance			± 20 %	

Protection function	Frame size	Rated current In (A)	Current setting (A)	Tripping characteristics / time
Short circuit short delay	VM51E01 ... VM51E08	32 ~ 800	Ir2 = (2-2.5-3-4-5-6-7-8-10-12)×Ir1	When Ir2 ≤ I < 1.5 Ir2, the inverse time action; 1.5 Ir2, t2 = (0.06-0.1-0.2-0.3) s Inverse time limit: ± 20 % When 1.5 Ir2 ≤ I < Ir3, time limit action t2 = 0.06 s, ± 0.02 s, t2 = 0.1 s, ± 0.03 s t2 = 0.2 s, ± 0.04 s, t2 = 0.3 s, ± 0.06 s
	VM51E08	800	Ir2 = (2-2.5-3-3.5-4-5-6-7-8-10)×Ir1	
Action tolerance			± 10 %	

Protection function	Frame size	Rated current In (A)	Current setting (A)	Tripping characteristics / time
Short circuit transient	VM51E01	32 ~ 100	Iir3 = (4-6-7-8-10-11-12-13-14-16)×Ir1	Instantaneous action
	VM51E02, VM51E04, VM51E08	250 ~ 630	Ir3 = (4-6-7-8-9-10-11-12-13-14)×Ir1	
	VM51E08	800	Ir3 = (4-5-6-7-8-9-10-11-12)×Ir1	
Action tolerance			± 15 %	
Neutral protection	All sizes	32 ~ 800	Ir1N = Ir1, Ir2N = Ir2, Ir3N = Ir3	
Overload pre-alarm	All sizes	32 ~ 800	Ir0 = (0.7-0.75-0.8-0.85-0.9-0.95-1.0)×Ir1	

For motor protection

Protection function	Frame size	Rated current In (A)	Current setting (A)	Tripping characteristics / time
Overload long delay	VM51E01	32	Ir1 = 12.5-14-16-18-20-22-25-28-30-32	Press I^2t action 1.05 Ir1, No action within 2 h; 1.2 Ir1, Action within 1 h; 1.5 Ir1: 21.3 s, 107 s, 142 s, 178 s; 2 Ir1, t1: 12 s, 60 s, 80 s, 100 s; 7.2 Ir1: 0.93 s, 4.63 s, 6.17 s, 7.72 s
		63	Ir1 = 25-28-32-36-40-45-50-56-60-63	
		100	Ir1 = 40-45-50-56-63-70-75-80-90-100	
	VM51E02	250	Ir1 = 100-112-125-140-150-160-180-200-225-250	
	VM51E04	400	Ir1 = 160-180-200-225-250-280-315-350-375-400	Press I^2t action 1.05 Ir1, No action within 2 h; 1.2 Ir1, Action within 1 h; 1.5 Ir1: 21.3 s, 107 s, 178 s, 267 s 2 Ir1, t1: 12 s, 60 s, 100 s, 150 s 7.2 Ir1: 0.93 s, 4.63 s, 7.72 s, 11.6 s
	VM51E08	630	Ir1 = 250-280-315-350-375-400-450-500-560-630	
Action tolerance			± 20 %	

Protection function	Frame size	Rated current In (A)	Current setting (A)	Tripping characteristics / time
Short circuit short delay	VM51E01 ... VM51E08	32 ~ 800	Ir2 = (2-2.5-3-4-5-6-7-8-10-12)×Ir1	When Ir2 ≤ I < 1.5 Ir2, the inverse time action; 1.5 Ir2, t2 = (0.06-0.1-0.2-0.3) s Inverse time limit: ± 20 % When 1.5 Ir2 ≤ I < Ir3, time limit action; t2 = 0.06 s, ± 0.02 s, t2 = 0.1 s, ± 0.03 s t2 = 0.2 s, ± 0.04 s, t2 = 0.3 s, ± 0.06 s
Action tolerance			± 10 %	

Protection function	Frame size	Rated current In (A)	Current setting (A)	Tripping characteristics / time
Short circuit transient	VM51E01	32 ~ 100	Ir3 = (4-6-7-8-10-11-12-13-14-16)×Ir1	Instantaneous action
	VM51E02, VM51E04, VM51E08	250 ~ 630	Ir3 = (4-6-7-8-9-10-11-12-13-14)×Ir1	
Action tolerance			± 15 %	
Neutral protection	All sizes	32 ~ 630	Ir1N = Ir1, Ir2N = Ir2, Ir3N = Ir3	
Overload pre-alarm	All sizes	32 ~ 630	Ir0 = (0.7-0.75-0.8-0.85-0.9-0.95-1.0)×Ir1	

3

VM51E series electronic over-current trip unit setting value

VM51E01, In = 32 A electronic over-current trip unit

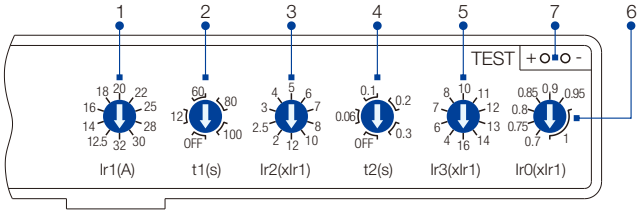

VM51E01, In = 63 A electronic over-current trip unit

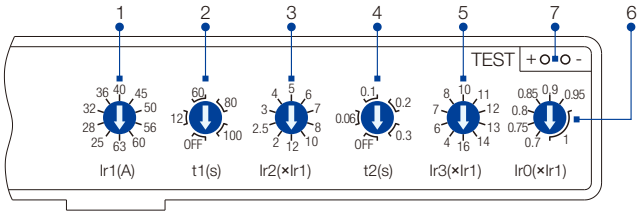

VM51E01, In = 100 A electronic over-current trip unit

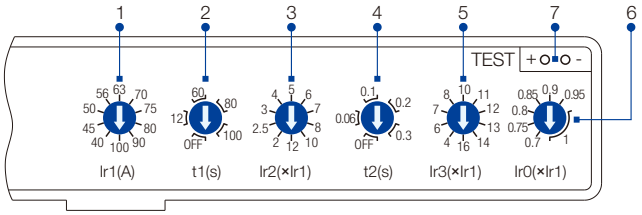

VM51E02, In = 250 A electronic over-current trip unit

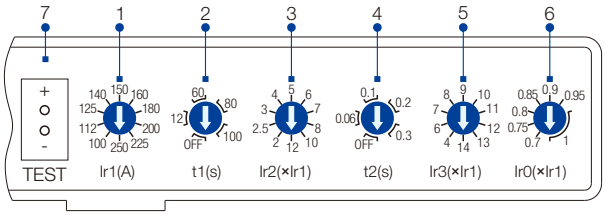

VM51E04, In = 400 A electronic over-current trip unit

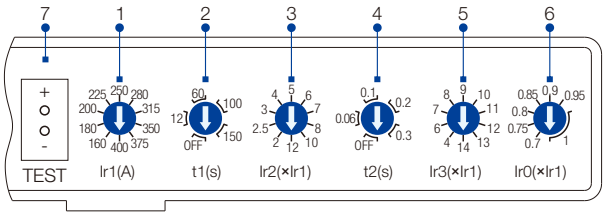

VM51E08, In = 630 A electronic over-current trip unit

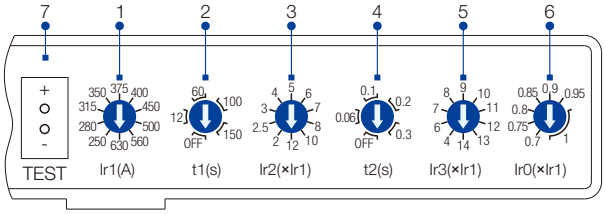

VM51E08, In = 800 A electronic over-current trip unit

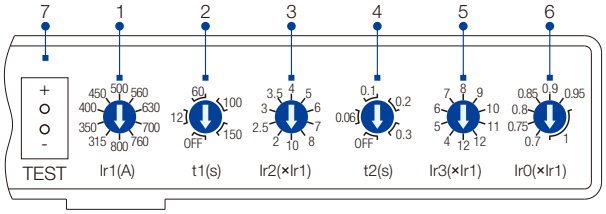

Protection characteristic curve of electronic over-current trip unit

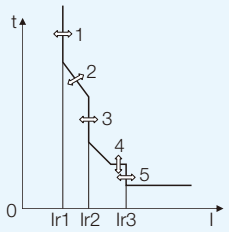

1. Overload long delay action current IR1 adjustment, according to the different rated current of the circuit breaker, can be in 10 gear adjustments;
2. Long delay action time adjustment, can be in 4 gear adjustments;
3. Short-circuit short-delay action current bright point Ir2 adjustment, can be in 10 gear adjustments;
4. Short delay action time T2 adjustment, can be in 4 gear adjustments
5. Short-circuit instantaneous action current Ir3 adjustment, can be in 9 gear or 10 gear adjustments;
6. Overload pre-alarm action current IR0 adjustment, can be in 7 gear adjustments;
7. Test interface for connecting DC12V test power supply, checking controller trip function

Selection and ordering data

	Frame size	Breaking capacity Icu (kA)	Icu (kA)	Rated current In Adjustable (A)	For power distribution Type code	For motor protection Type code
	3-pole					
	VM51E01	50	35	16 … 32	VM51E01-3P-32	VM51E01-3M-32
				32 … 63	VM51E01-3P-63	VM51E01-3M-63
				63 … 100	VM51E01-3P-100	VM51E01-3M-100
	VM51E02	50	35	100 … 250	VM51E02-3P-250	VM51E02-3M-250
	VM51E04	65	42	200 … 400	VM51E04-3P-400	VM51E04-3M-400
	VM51E08	75	50	400 … 630	VM51E08-3P-630	VM51E08-3M-630
				630 … 800	VM51E08-3P-800	VM51E08-3M-800
	4-pole					
	VM51E01	50	35	16 … 32	VM51E01-4P-32	VM51E01-4M-32
				32 … 63	VM51E01-4P-63	VM51E01-4M-63
				63 … 100	VM51E01-4P-100	VM51E01-4M-100
	VM51E02	50	35	100 … 250	VM51E02-4P-250	VM51E02-4M-250
	VM51E04	65	42	200 … 400	VM51E04-4P-400	VM51E04-4M-400
	VM51E08	75	50	400 … 630	VM51E08-4P-630	VM51E08-4M-630
				630 … 800	VM51E08-4P-800	VM51E08-4M-800

Outline and installation dimensions

unit in mm

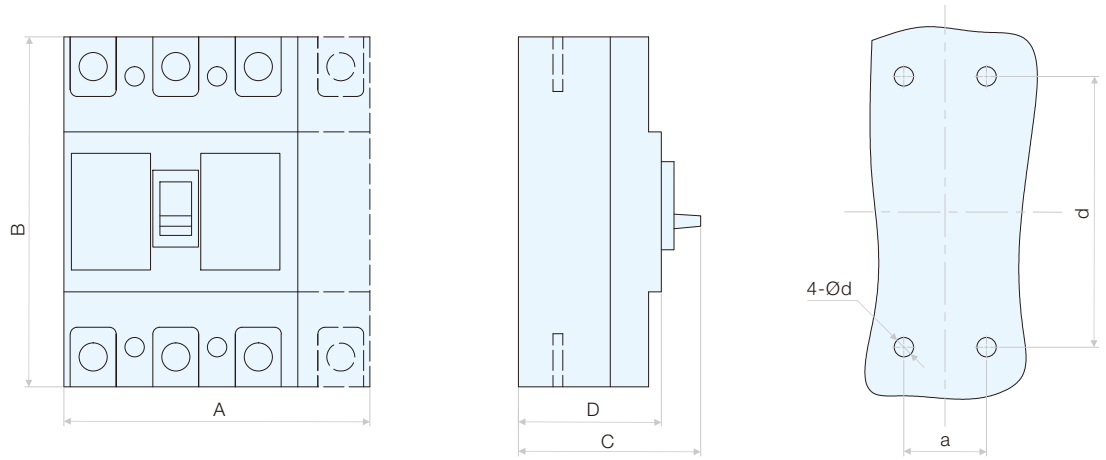

Model	Poles	Outline dimensions				Installation dimensions		
		A	B	C	D	a	b	Ød
	(P)	(mm)				(mm)		
VM51E01	3	92	150	110	92	30	129	4.5
	4	122				60		
VM51E02	3	107	165	110	90	35	126	4.5
	4	142				70		
VM51E04	3	150	257	146.5	106.5	44	194	7
	4	198				94		
VM51E08	3	210	280	155	115.5	70	243	7
	4	280				140		

Residual Current Circuit Breakers
Series VM51L

Product profile



- The Residual Current circuit breakers of series VM51L (circuit breaker) is one of the new circuit breakers developed with international advanced design and manufacturing technology of our company. The rated insulating voltage is 800 V, Suitable for the circuit with the frequency 50/60 Hz, rated working voltage 400 V, rated current up to 630 V for the infrequent change-over and motor protection. The circuit breakers has the protective function of overload protection, short-circuit protection and under-voltage protection, protect the circuit and the power unit from the damage, at the same time, it can provide the protection against indirect contact, and can also protect against long-term ground faults that cannot be detected by overcurrent protection, which may cause fire hazards. When others protective devices fail, the circuit breaker VM51L with rated residual currents 30 mA can provide additional protect against direct contacts.
- The circuit breaker can be equipped with a leakage alarm module to avoid major losses caused by power outages.
- The circuit breakers has two types: type L (Standard) and type M (high breaking capacity) according to its rated breaking capacity (Icu), it has characteristics of compact size, high breaking capacity, short arc, anti-vibration, etc.
- The circuit breaker can be installed vertically or horizontally.
- The circuit breaker can't be reversed into the line, that is, only 1, 3, and 5 are connected to the power line, and 2, 4, and 6 are connected to the load line.
- This circuit breakers has the insulation function, its corresponding symbol is  ;
- The Circuit breakers meet the requirements of IEC 60947-2.

Conditions for normal use and the installation conditions

- Ambient temperature -5 ºC ~ +40 ºC
- Altitude: Max. 2,000
- Humidity: When the ambient air temperature is +40 ºC, the relative humidity of the air shall not be higher than 50 %, a higher relative humidity is allowed at a lower temperature. For example, the relative humidity should be 90% when temperature is 20 ºC. Special measures should be adopted for the condensation occasionally produced due to temperature change.
- Pollution degree: 3
- Installation type: Main circuit III; Others II.
- Circuit breaker is suitable for electromagnetic environment A
- The circuit breaker should be installed in a place where there is no danger of explosion and no lead dust, no enough corrosion metal and damage to insulation.
- The circuit breaker should be installed in a place where there is no wind and rain.
- Storage temperature: -40 ºC ~ +70 ºC.

Main technical specifications

Type			VM51L01		VM51L02		VM51L04		VM51L06	
Standard			IEC 60947-2							
Breaking capacity			D	G	D	G	G	H	G	H
Poles (P)			3	3, 4	3	3, 4	3, 4	3	3, 4	3
Rated frame current Inm (A)			100		225		400		630	
Rated current In (A)			16, 20, 25, 32, 40, 50, 63, 80, 100		100, 125, 140, 160, 180, 200, 225		225, 250, 315, 350, 400		400, 500, 630	
Rated insulating voltage Ui (V)			AC 800		AC 800		AC 800		AC 800	
Rated impulse withstand voltage Uimp (kV)			8000		8000		8000		8000	
Rated service voltage Ue (V)			AC 400		AC 400		AC 400		AC 400	
Arcing distance (mm)			≤ 50		≤ 50		≤ 100		≤ 100	
Rated ultimate short-circuit breaking capacity Icu (kA)			35	50	35	50	50	65	50	65
Rated service short-circuit breaking capacity Ics (kA)			22	35	22	35	35	42	35	42
Rated residual currents IΔn (A)	Residual current protection of AC-Type	Type-U release, non-delay	0.03-0.1-0.3-0.5		0.03-0.1-0.3-0.5		-		-	
		Type-V release, non-delay, with delay time adjustable	0.1-0.3-0.5		0.1-0.3-0.5		0.1-0.3-0.5		0.3-0.5-1	
		Type-W release, without delay, with delay time adjustable	0.3-1-3-10		0.3-1-3-10		1-3-10- 30		1-3-10-30	
	Residual current protection of A-Type	Type-VA release, without delay, with delay time adjustable	0.1-0.3-0.5		0.1-0.3-0.5		0.1-0.3-0.5		0.3-0.5-1	
Rated residual non-operating current			1/2 IΔn		1/2 IΔn		1/2 IΔn		1/2 IΔn	
Rated residual short-circuit (breaking) capacity			1/4 Icu		1/4 Icu		1/4 Icu		1/4 Icu	
Utilization category			A		A		A		A	
Electrical life (times)			8000		8000		7500		7500	
Mechanical life (times)		Without maintenance	20000		20000		10000		10000	
		With maintenance	40000		40000		20000		20000	
Overall dimension		Width	92	122	107	142	150	198	210	280
		Length	150		165		257		280	
		Height	92		90		106.5		115.5	

Notes:

1. According to IEC 60947-1 The term "lifetime" indicates the frequency of the number of operating cycles that the electric completes before repairing or replacing parts.
2. When the three-phase circuit breaker of this series is connected to the three-phase load, the load cannot be with the neutral line, and the load control loop power supply taken from the load terminal of the circuit breaker can not carry the neutral line. Otherwise, the circuit breaker will malfunction.

Tripping Characteristic

For power distribution

Rated current	**Thermal release(Ambient temperature +40 °C)**		**Electromagnetic tripping unit tripping current**
	1.05 In (cold conditions) tripping time	**1.30In (thermal state) tripping time**	
(A)	**(h)**	**(h)**	**(A)**
16 ≤ In ≤ 63	≥ 1	< 1	10 In ± 20 %
63 < In ≤ 140	≥ 2	< 2	-
140 < In ≤ 630	≥ 2	< 2	5 In ± 20 %, 10 In ± 20 %

Notes: For the VM51L02 4P circuit breaker, the neutral (N) electromagnetic release (short circuit protection) does not have a 5 In specification.

For motor protection

Rated current	**Thermal overload release (Ambient temperature +40 °C)**					**Operating current of electronic release**
	1.0 In (cold conditions) non-tripping time	**1.20 In (thermal state) tripping time**	**1.50 In (thermal state) tripping time**	**7.2 In (cold conditions) tripping time**	**Tripping level**	
(A)	**(h)**	**(h)**				**(A)**
16 ≤ In ≤ 630	≥ 2	< 2	8 min	6 s < Tp ≤ 20 s	20	12 In ± 20 %

For power distribution

Residual current		IΔn	2 IΔn	5 IΔn	10 IΔn
Non-delay	Maximun tripping time (s)	0.3	0.15	0.04	0.04
Delay	Maximun tripping time (s)	0.5, 1.15, 2.15	0.35, 1, 2	0.25, 0.9, 1.9	0.25, 0.9, 1.9
	Limit non-actuating time Δt (s)	-	0.1, 0.5, 1	-	-

3

Outline and installation dimensions

unit in mm

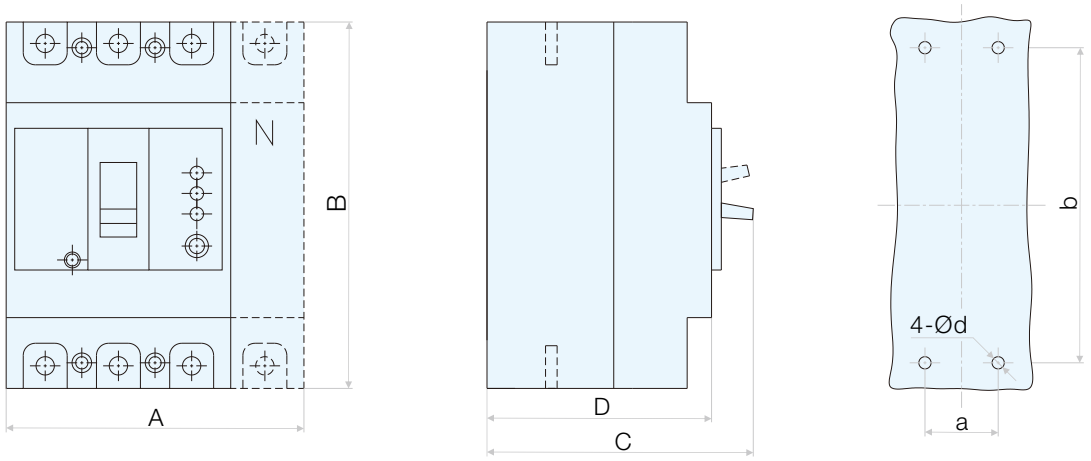

Model	Poles	Outline dimensions				Installation dimensions		
		A	B	C	D	a	b	Ød
	(P)	(mm)				(mm)		
VM51L01D	3	92	150	94	75	30	129	4.5
VM51L01G	3	92	150	110	90	30	129	4.5
	4	122				60		
VM51L02D	3	107	165	94	75	35	126	4.5
VM51L02G	3	107	165	110	90	35	126	4.5
	4	142				70		
VM51L04	3	150	257	146.5	106.5	44	194	7
	4	198				94		
VM51L06	3	210	280	155	115.5	70	243	7
	4	280				140		

Selection and ordering data

Type of residual current	Rated residual current IΔn Adjustable	Tripping characteristics for residual current		Rated current In	For power distribution	For motor protection
		Instantaneous	Time-delayed Adjustable			
	(mA)			(A)	Type code	Type code
D: Icu = 35 kA, Ics = 22 kA						
AC	0.03 - 0.1 - 0.3 - 0.5	√		16	VM51L01D-3P16-U	VM51L01D-3M16-U
				20	VM51L01D-3P20-U	VM51L01D-3M20-U
				25	VM51L01D-3P25-U	VM51L01D-3M25-U
				32	VM51L01D-3P32-U	VM51L01D-3M32-U
				40	VM51L01D-3P40-U	VM51L01D-3M40-U
				50	VM51L01D-3P50-U	VM51L01D-3M50-U
				63	VM51L01D-3P63-U	VM51L01D-3M63-U
				80	VM51L01D-3P80-U	VM51L01D-3M80-U
				100	VM51L01D-3P100-U	VM51L01D-3M100-U
	0.1 - 0.3 - 0.5	√	√	16	VM51L01D-3P16	VM51L01D-3M16
				20	VM51L01D-3P20	VM51L01D-3M20
				25	VM51L01D-3P25	VM51L01D-3M25
				32	VM51L01D-3P32	VM51L01D-3M32
				40	VM51L01D-3P40	VM51L01D-3M40
				50	VM51L01D-3P50	VM51L01D-3M50
				63	VM51L01D-3P63	VM51L01D-3M63
				80	VM51L01D-3P80	VM51L01D-3M80
				100	VM51L01D-3P100	VM51L01D-3M100
	0.3 - 1 - 3 - 10	√	√	16	VM51L01D-3P16-W	VM51L01D-3M16-W
				20	VM51L01D-3P20-W	VM51L01D-3M20-W
				25	VM51L01D-3P25-W	VM51L01D-3M25-W
				32	VM51L01D-3P32-W	VM51L01D-3M32-W
				40	VM51L01D-3P40-W	VM51L01D-3M40-W
				50	VM51L01D-3P50-W	VM51L01D-3M50-W
				63	VM51L01D-3P63-W	VM51L01D-3M63-W
				80	VM51L01D-3P80-W	VM51L01D-3M80-W
				100	VM51L01D-3P100-W	VM51L01D-3M100-W
A	0.1 - 0.3 - 0.5	√	√	16	VM51L01D-3P16-A	VM51L01D-3M16-A
				20	VM51L01D-3P20-A	VM51L01D-3M20-A
				25	VM51L01D-3P25-A	VM51L01D-3M25-A
				32	VM51L01D-3P32-A	VM51L01D-3M32-A
				40	VM51L01D-3P40-A	VM51L01D-3M40-A
				50	VM51L01D-3P50-A	VM51L01D-3M50-A
				63	VM51L01D-3P63-A	VM51L01D-3M63-A
				80	VM51L01D-3P80-A	VM51L01D-3M80-A
				100	VM51L01D-3P100-A	VM51L01D-3M100-A

Selection and ordering data

Type of residual current	Rated residual current IΔn Adjustable	Tripping characteristics for residual current		Rated current In	For power distribution	For motor protection
		Instantaneous	Time-delayed Adjustable			
	(mA)			(A)	Type code	Type code
G: Icu = 50 kA, Ics = 35 kA						
AC	0.03 - 0.1 - 0.3 - 0.5	√		16	VM51L01G-3P16-U	VM51L01G-3M16-U
				20	VM51L01G-3P20-U	VM51L01G-3M20-U
				25	VM51L01G-3P25-U	VM51L01G-3M25-U
				32	VM51L01G-3P32-U	VM51L01G-3M32-U
				40	VM51L01G-3P40-U	VM51L01G-3M40-U
				50	VM51L01G-3P50-U	VM51L01G-3M50-U
				63	VM51L01G-3P63-U	VM51L01G-3M63-U
				80	VM51L01G-3P80-U	VM51L01G-3M80-U
				100	VM51L01G-3P100-U	VM51L01G-3M100-U
	0.1 - 0.3 - 0.5	√	√	16	VM51L01G-3P16	VM51L01G-3M16
				20	VM51L01G-3P20	VM51L01G-3M20
				25	VM51L01G-3P25	VM51L01G-3M25
				32	VM51L01G-3P32	VM51L01G-3M32
				40	VM51L01G-3P40	VM51L01G-3M40
				50	VM51L01G-3P50	VM51L01G-3M50
				63	VM51L01G-3P63	VM51L01G-3M63
				80	VM51L01G-3P80	VM51L01G-3M80
				100	VM51L01G-3P100	VM51L01G-3M100
	0.3 - 1 - 3 - 10	√	√	16	VM51L01G-3P16-W	VM51L01G-3M16-W
				20	VM51L01G-3P20-W	VM51L01G-3M20-W
				25	VM51L01G-3P25-W	VM51L01G-3M25-W
				32	VM51L01G-3P32-W	VM51L01G-3M32-W
				40	VM51L01G-3P40-W	VM51L01G-3M40-W
				50	VM51L01G-3P50-W	VM51L01G-3M50-W
				63	VM51L01G-3P63-W	VM51L01G-3M63-W
				80	VM51L01G-3P80-W	VM51L01G-3M80-W
				100	VM51L01G-3P100-W	VM51L01G-3M100-W
A	0.1 - 0.3 - 0.5	√	√	16	VM51L01G-3P16-A	VM51L01G-3M16-A
				20	VM51L01G-3P20-A	VM51L01G-3M20-A
				25	VM51L01G-3P25-A	VM51L01G-3M25-A
				32	VM51L01G-3P32-A	VM51L01G-3M32-A
				40	VM51L01G-3P40-A	VM51L01G-3M40-A
				50	VM51L01G-3P50-A	VM51L01G-3M50-A
				63	VM51L01G-3P63-A	VM51L01G-3M63-A
				80	VM51L01G-3P80-A	VM51L01G-3M80-A
				100	VM51L01G-3P100-A	VM51L01G-3M100-A

Selection and ordering data

Type of residual current	Rated residual current IΔn Adjustable	Tripping characteristics for residual current		Rated current In	For power distribution	For motor protection
		Instantaneous	Time-delayed Adjustable			
	(mA)			(A)	Type code	Type code
Neutral unprotected, G: Icu = 50 kA, Ics = 35 kA						
AC	0.03 - 0.1 - 0.3 - 0.5	√		16	VM51L01G-4AP16-U	VM51L01G-4AM16-U
				20	VM51L01G-4AP20-U	VM51L01G-4AM20-U
				25	VM51L01G-4AP25-U	VM51L01G-4AM25-U
				32	VM51L01G-4AP32-U	VM51L01G-4AM32-U
				40	VM51L01G-4AP40-U	VM51L01G-4AM40-U
				50	VM51L01G-4AP50-U	VM51L01G-4AM50-U
				63	VM51L01G-4AP63-U	VM51L01G-4AM63-U
				80	VM51L01G-4AP80-U	VM51L01G-4AM80-U
				100	VM51L01G-4AP100-U	VM51L01G-4AM100-U
	0.1 - 0.3 - 0.5	√	√	16	VM51L01G-4AP16	VM51L01G-4AM16
				20	VM51L01G-4AP20	VM51L01G-4AM20
				25	VM51L01G-4AP25	VM51L01G-4AM25
				32	VM51L01G-4AP32	VM51L01G-4AM32
				40	VM51L01G-4AP40	VM51L01G-4AM40
				50	VM51L01G-4AP50	VM51L01G-4AM50
				63	VM51L01G-4AP63	VM51L01G-4AM63
				80	VM51L01G-4AP80	VM51L01G-4AM80
				100	VM51L01G-4AP100	VM51L01G-4AM100
	0.3 - 1 - 3 - 10	√	√	16	VM51L01G-4AP16-W	VM51L01G-4AM16-W
				20	VM51L01G-4AP20-W	VM51L01G-4AM20-W
				25	VM51L01G-4AP25-W	VM51L01G-4AM25-W
				32	VM51L01G-4AP32-W	VM51L01G-4AM32-W
				40	VM51L01G-4AP40-W	VM51L01G-4AM40-W
				50	VM51L01G-4AP50-W	VM51L01G-4AM50-W
				63	VM51L01G-4AP63-W	VM51L01G-4AM63-W
				80	VM51L01G-4AP80-W	VM51L01G-4AM80-W
				100	VM51L01G-4AP100-W	VM51L01G-4AM100-W
A	0.1 - 0.3 - 0.5	√	√	16	VM51L01G-4AP16-A	VM51L01G-4AM16-A
				20	VM51L01G-4AP20-A	VM51L01G-4AM20-A
				25	VM51L01G-4AP25-A	VM51L01G-4AM25-A
				32	VM51L01G-4AP32-A	VM51L01G-4AM32-A
				40	VM51L01G-4AP40-A	VM51L01G-4AM40-A
				50	VM51L01G-4AP50-A	VM51L01G-4AM50-A
				63	VM51L01G-4AP63-A	VM51L01G-4AM63-A
				80	VM51L01G-4AP80-A	VM51L01G-4AM80-A
				100	VM51L01G-4AP100-A	VM51L01G-4AM100-A

Series VM51L01 4 pole - 3 trips

Selection and ordering data

Type of residual current	Rated residual current IΔn Adjustable	Tripping characteristics for residual current		Rated current In	For power distribution	For motor protection
		Instantaneous	Time-delayed Adjustable			
	(mA)			(A)	Type code	Type code
Neutral protected, G: Icu = 50 kA, Ics = 35 kA						
AC	0.03 - 0.1 - 0.3 - 0.5	√		16	VM51L01G-4DP16-U	VM51L01G-4DM16-U
				20	VM51L01G-4DP20-U	VM51L01G-4DM20-U
				25	VM51L01G-4DP25-U	VM51L01G-4DM25-U
				32	VM51L01G-4DP32-U	VM51L01G-4DM32-U
				40	VM51L01G-4DP40-U	VM51L01G-4DM40-U
				50	VM51L01G-4DP50-U	VM51L01G-4DM50-U
				63	VM51L01G-4DP63-U	VM51L01G-4DM63-U
				80	VM51L01G-4DP80-U	VM51L01G-4DM80-U
				100	VM51L01G-4DP100-U	VM51L01G-4DM100-U
	0.1 - 0.3 - 0.5	√	√	16	VM51L01G-4DP16	VM51L01G-4DM16
				20	VM51L01G-4DP20	VM51L01G-4DM20
				25	VM51L01G-4DP25	VM51L01G-4DM25
				32	VM51L01G-4DP32	VM51L01G-4DM32
				40	VM51L01G-4DP40	VM51L01G-4DM40
				50	VM51L01G-4DP50	VM51L01G-4DM50
				63	VM51L01G-4DP63	VM51L01G-4DM63
				80	VM51L01G-4DP80	VM51L01G-4DM80
				100	VM51L01G-4DP100	VM51L01G-4DM100
	0.3 - 1 - 3 - 10	√	√	16	VM51L01G-4DP16-W	VM51L01G-4DM16-W
				20	VM51L01G-4DP20-W	VM51L01G-4DM20-W
				25	VM51L01G-4DP25-W	VM51L01G-4DM25-W
				32	VM51L01G-4DP32-W	VM51L01G-4DM32-W
				40	VM51L01G-4DP40-W	VM51L01G-4DM40-W
				50	VM51L01G-4DP50-W	VM51L01G-4DM50-W
				63	VM51L01G-4DP63-W	VM51L01G-4DM63-W
				80	VM51L01G-4DP80-W	VM51L01G-4DM80-W
				100	VM51L01G-4DP100-W	VM51L01G-4DM100-W
A	0.1 - 0.3 - 0.5	√	√	16	VM51L01G-4DP16-A	VM51L01G-4DM16-A
				20	VM51L01G-4DP20-A	VM51L01G-4DM20-A
				25	VM51L01G-4DP25-A	VM51L01G-4DM25-A
				32	VM51L01G-4DP32-A	VM51L01G-4DM32-A
				40	VM51L01G-4DP40-A	VM51L01G-4DM40-A
				50	VM51L01G-4DP50-A	VM51L01G-4DM50-A
				63	VM51L01G-4DP63-A	VM51L01G-4DM63-A
				80	VM51L01G-4DP80-A	VM51L01G-4DM80-A
				100	VM51L01G-4DP100-A	VM51L01G-4DM100-A

Selection and ordering data

Type of residual current	Rated residual current IΔn Adjustable	Tripping characteristics for residual current		Rated current In	For power distribution	For motor protection
		Instantaneous	Time-delayed Adjustable			
	(mA)			(A)	Type code	Type code
Neutral unprotected, G: Icu = 50 kA, Ics = 35 kA						
AC	0.03 - 0.1 - 0.3 - 0.5	√		16	VM51L01G-4BP16-U	VM51L01G-4BM16-U
				20	VM51L01G-4BP20-U	VM51L01G-4BM20-U
				25	VM51L01G-4BP25-U	VM51L01G-4BM25-U
				32	VM51L01G-4BP32-U	VM51L01G-4BM32-U
				40	VM51L01G-4BP40-U	VM51L01G-4BM40-U
				50	VM51L01G-4BP50-U	VM51L01G-4BM50-U
				63	VM51L01G-4BP63-U	VM51L01G-4BM63-U
				80	VM51L01G-4BP80-U	VM51L01G-4BM80-U
				100	VM51L01G-4BP100-U	VM51L01G-4BM100-U
	0.1 - 0.3 - 0.5	√	√	16	VM51L01G-4BP16	VM51L01G-4BM16
				20	VM51L01G-4BP20	VM51L01G-4BM20
				25	VM51L01G-4BP25	VM51L01G-4BM25
				32	VM51L01G-4BP32	VM51L01G-4BM32
				40	VM51L01G-4BP40	VM51L01G-4BM40
				50	VM51L01G-4BP50	VM51L01G-4BM50
				63	VM51L01G-4BP63	VM51L01G-4BM63
				80	VM51L01G-4BP80	VM51L01G-4BM80
				100	VM51L01G-4BP100	VM51L01G-4BM100
	0.3 - 1 - 3 - 10	√	√	16	VM51L01G-4BP16-W	VM51L01G-4BM16-W
				20	VM51L01G-4BP20-W	VM51L01G-4BM20-W
				25	VM51L01G-4BP25-W	VM51L01G-4BM25-W
				32	VM51L01G-4BP32-W	VM51L01G-4BM32-W
				40	VM51L01G-4BP40-W	VM51L01G-4BM40-W
				50	VM51L01G-4BP50-W	VM51L01G-4BM50-W
				63	VM51L01G-4BP63-W	VM51L01G-4BM63-W
				80	VM51L01G-4BP80-W	VM51L01G-4BM80-W
				100	VM51L01G-4BP100-W	VM51L01G-4BM100-W
A	0.1 - 0.3 - 0.5	√	√	16	VM51L01G-4BP16-A	VM51L01G-4BM16-A
				20	VM51L01G-4BP20-A	VM51L01G-4BM20-A
				25	VM51L01G-4BP25-A	VM51L01G-4BM25-A
				32	VM51L01G-4BP32-A	VM51L01G-4BM32-A
				40	VM51L01G-4BP40-A	VM51L01G-4BM40-A
				50	VM51L01G-4BP50-A	VM51L01G-4BM50-A
				63	VM51L01G-4BP63-A	VM51L01G-4BM63-A
				80	VM51L01G-4BP80-A	VM51L01G-4BM80-A
				100	VM51L01G-4BP100-A	VM51L01G-4BM100-A

Series VM51L01 4 pole - 4 trips

Selection and ordering data

Type of residual current	Rated residual current IΔn Adjustable	Tripping characteristics for residual current		Rated current In	For power distribution	For motor protection
		Instantaneous	Time-delayed Adjustable			
	(mA)			(A)	Type code	Type code
Neutral protected, G: Icu = 50 kA, Ics = 35 kA						
AC	0.03 - 0.1 - 0.3 - 0.5	√		16	VM51L01G-4CP16-U	VM51L01G-4CM16-U
				20	VM51L01G-4CP20-U	VM51L01G-4CM20-U
				25	VM51L01G-4CP25-U	VM51L01G-4CM25-U
				32	VM51L01G-4CP32-U	VM51L01G-4CM32-U
				40	VM51L01G-4CP40-U	VM51L01G-4CM40-U
				50	VM51L01G-4CP50-U	VM51L01G-4CM50-U
				63	VM51L01G-4CP63-U	VM51L01G-4CM63-U
				80	VM51L01G-4CP80-U	VM51L01G-4CM80-U
				100	VM51L01G-4CP100-U	VM51L01G-4CM100-U
	0.1 - 0.3 - 0.5	√	√	16	VM51L01G-4CP16	VM51L01G-4CM16
				20	VM51L01G-4CP20	VM51L01G-4CM20
				25	VM51L01G-4CP25	VM51L01G-4CM25
				32	VM51L01G-4CP32	VM51L01G-4CM32
				40	VM51L01G-4CP40	VM51L01G-4CM40
				50	VM51L01G-4CP50	VM51L01G-4CM50
				63	VM51L01G-4CP63	VM51L01G-4CM63
				80	VM51L01G-4CP80	VM51L01G-4CM80
				100	VM51L01G-4CP100	VM51L01G-4CM100
	0.3 - 1 - 3 - 10	√	√	16	VM51L01G-4CP16-W	VM51L01G-4CM16-W
				20	VM51L01G-4CP20-W	VM51L01G-4CM20-W
				25	VM51L01G-4CP25-W	VM51L01G-4CM25-W
				32	VM51L01G-4CP32-W	VM51L01G-4CM32-W
				40	VM51L01G-4CP40-W	VM51L01G-4CM40-W
				50	VM51L01G-4CP50-W	VM51L01G-4CM50-W
				63	VM51L01G-4CP63-W	VM51L01G-4CM63-W
				80	VM51L01G-4CP80-W	VM51L01G-4CM80-W
				100	VM51L01G-4CP100-W	VM51L01G-4CM100-W
A	0.1 - 0.3 - 0.5	√	√	16	VM51L01G-4CP16-A	VM51L01G-4CM16-A
				20	VM51L01G-4CP20-A	VM51L01G-4CM20-A
				25	VM51L01G-4CP25-A	VM51L01G-4CM25-A
				32	VM51L01G-4CP32-A	VM51L01G-4CM32-A
				40	VM51L01G-4CP40-A	VM51L01G-4CM40-A
				50	VM51L01G-4CP50-A	VM51L01G-4CM50-A
				63	VM51L01G-4CP63-A	VM51L01G-4CM63-A
				80	VM51L01G-4CP80-A	VM51L01G-4CM80-A
				100	VM51L01G-4CP100-A	VM51L01G-4CM100-A

Selection and ordering data

Type of residual current	Rated residual current IΔn Adjustable	Tripping characteristics for residual current		Rated current In	For power distribution	For motor protection
		Instantaneous	Time-delayed Adjustable			
	(mA)			(A)	Type code	Type code
D: Icu = 35 kA, Ics = 22 kA						
AC	0.03 - 0.1 - 0.3 - 0.5	√		100	VM51L02D-3P100-U	VM51L02D-3M100-U
				125	VM51L02D-3P125-U	VM51L02D-3M125-U
				140	VM51L02D-3P140-U	VM51L02D-3M140-U
				160	VM51L02D-3P160-U	VM51L02D-3M160-U
				180	VM51L02D-3P180-U	VM51L02D-3M180-U
				200	VM51L02D-3P200-U	VM51L02D-3M200-U
				225	VM51L02D-3P225-U	VM51L02D-3M225-U
	0.1 - 0.3 - 0.5	√	√	100	VM51L02D-3P100	VM51L02D-3M100
				125	VM51L02D-3P125	VM51L02D-3M125
				140	VM51L02D-3P140	VM51L02D-3M140
				160	VM51L02D-3P160	VM51L02D-3M160
				180	VM51L02D-3P180	VM51L02D-3M180
				200	VM51L02D-3P200	VM51L02D-3M200
				225	VM51L02D-3P225	VM51L02D-3M225
	0.3 - 1 - 3 - 10	√	√	100	VM51L02D-3P100-W	VM51L02D-3M100-W
				125	VM51L02D-3P125-W	VM51L02D-3M125-W
				140	VM51L02D-3P140-W	VM51L02D-3M140-W
				160	VM51L02D-3P160-W	VM51L02D-3M160-W
				180	VM51L02D-3P180-W	VM51L02D-3M180-W
				200	VM51L02D-3P200-W	VM51L02D-3M200-W
				225	VM51L02D-3P225-W	VM51L02D-3M225-W
A	0.1 - 0.3 - 0.5	√	√	100	VM51L02D-3P100-A	VM51L02D-3M100-A
				125	VM51L02D-3P125-A	VM51L02D-3M125-A
				140	VM51L02D-3P140-A	VM51L02D-3M140-A
				160	VM51L02D-3P160-A	VM51L02D-3M160-A
				180	VM51L02D-3P180-A	VM51L02D-3M180-A
				200	VM51L02D-3P200-A	VM51L02D-3M200-A
				225	VM51L02D-3P225-A	VM51L02D-3M225-A
G: Icu = 50 kA, Ics = 35 kA						
AC	0.03 - 0.1 - 0.3 - 0.5	√		100	VM51L02G-3P100-U	VM51L02G-3M100-U
				125	VM51L02G-3P125-U	VM51L02G-3M125-U
				140	VM51L02G-3P140-U	VM51L02G-3M140-U
				160	VM51L02G-3P160-U	VM51L02G-3M160-U
				180	VM51L02G-3P180-U	VM51L02G-3M180-U
				200	VM51L02G-3P200-U	VM51L02G-3M200-U
				225	VM51L02G-3P225-U	VM51L02G-3M225-U
	0.1 - 0.3 - 0.5	√	√	100	VM51L02G-3P100	VM51L02G-3M100
				125	VM51L02G-3P125	VM51L02G-3M125
				140	VM51L02G-3P140	VM51L02G-3M140
				160	VM51L02G-3P160	VM51L02G-3M160
				180	VM51L02G-3P180	VM51L02G-3M180
				200	VM51L02G-3P200	VM51L02G-3M200
				225	VM51L02G-3P225	VM51L02G-3M225
	0.3 - 1 - 3 - 10	√	√	100	VM51L02G-3P100-W	VM51L02G-3M100-W
				125	VM51L02G-3P125-W	VM51L02G-3M125-W
				140	VM51L02G-3P140-W	VM51L02G-3M140-W
				160	VM51L02G-3P160-W	VM51L02G-3M160-W
				180	VM51L02G-3P180-W	VM51L02G-3M180-W
				200	VM51L02G-3P200-W	VM51L02G-3M200-W
				225	VM51L02G-3P225-W	VM51L02G-3M225-W
A	0.1 - 0.3 - 0.5	√	√	100	VM51L02G-3P100-A	VM51L02G-3M100-A
				125	VM51L02G-3P125-A	VM51L02G-3M125-A
				140	VM51L02G-3P140-A	VM51L02G-3M140-A
				160	VM51L02G-3P160-A	VM51L02G-3M160-A
				180	VM51L02G-3P180-A	VM51L02G-3M180-A
				200	VM51L02G-3P200-A	VM51L02G-3M200-A
				225	VM51L02G-3P225-A	VM51L02G-3M225-A

Selection and ordering data

Type of residual current	Rated residual current IΔn Adjustable	Tripping characteristics for residual current		Rated current In	For power distribution	For motor protection
		Instantaneous	Time-delayed Adjustable			
	(mA)			(A)	Type code	Type code
Neutral unprotected, G: Icu = 50 kA, Ics = 35 kA						
AC	0.03 - 0.1 - 0.3 - 0.5	√		100	VM51L02G-4AP100-U	VM51L02G-4AM100-U
				125	VM51L02G-4AP125-U	VM51L02G-4AM125-U
				140	VM51L02G-4AP140-U	VM51L02G-4AM140-U
				160	VM51L02G-4AP160-U	VM51L02G-4AM160-U
				180	VM51L02G-4AP180-U	VM51L02G-4AM180-U
				200	VM51L02G-4AP200-U	VM51L02G-4AM200-U
				225	VM51L02G-4AP225-U	VM51L02G-4AM225-U
	0.1 - 0.3 - 0.5	√	√	100	VM51L02G-4AP100	VM51L02G-4AM100
				125	VM51L02G-4AP125	VM51L02G-4AM125
				140	VM51L02G-4AP140	VM51L02G-4AM140
				160	VM51L02G-4AP160	VM51L02G-4AM160
				180	VM51L02G-4AP180	VM51L02G-4AM180
				200	VM51L02G-4AP200	VM51L02G-4AM200
				225	VM51L02G-4AP225	VM51L02G-4AM225
	0.3 - 1 - 3 - 10	√	√	100	VM51L02G-4AP100-W	VM51L02G-4AM100-W
				125	VM51L02G-4AP125-W	VM51L02G-4AM125-W
				140	VM51L02G-4AP140-W	VM51L02G-4AM140-W
				160	VM51L02G-4AP160-W	VM51L02G-4AM160-W
				180	VM51L02G-4AP180-W	VM51L02G-4AM180-W
				200	VM51L02G-4AP200-W	VM51L02G-4AM200-W
				225	VM51L02G-4AP225-W	VM51L02G-4AM225-W
A	0.1 - 0.3 - 0.5	√	√	100	VM51L02G-4AP100-A	VM51L02G-4AM100-A
				125	VM51L02G-4AP125-A	VM51L02G-4AM125-A
				140	VM51L02G-4AP140-A	VM51L02G-4AM140-A
				160	VM51L02G-4AP160-A	VM51L02G-4AM160-A
				180	VM51L02G-4AP180-A	VM51L02G-4AM180-A
				200	VM51L02G-4AP200-A	VM51L02G-4AM200-A
				225	VM51L02G-4AP225-A	VM51L02G-4AM225-A
Neutral protected, G: Icu = 50 kA, Ics = 35 kA						
AC	0.03 - 0.1 - 0.3 - 0.5	√		100	VM51L02G-4DP100-U	VM51L02G-4DM100-U
				125	VM51L02G-4DP125-U	VM51L02G-4DM125-U
				140	VM51L02G-4DP140-U	VM51L02G-4DM140-U
				160	VM51L02G-4DP160-U	VM51L02G-4DM160-U
				180	VM51L02G-4DP180-U	VM51L02G-4DM180-U
				200	VM51L02G-4DP200-U	VM51L02G-4DM200-U
				225	VM51L02G-4DP225-U	VM51L02G-4DM225-U
	0.1 - 0.3 - 0.5	√	√	100	VM51L02G-4DP100	VM51L02G-4DM100
				125	VM51L02G-4DP125	VM51L02G-4DM125
				140	VM51L02G-4DP140	VM51L02G-4DM140
				160	VM51L02G-4DP160	VM51L02G-4DM160
				180	VM51L02G-4DP180	VM51L02G-4DM180
				200	VM51L02G-4DP200	VM51L02G-4DM200
				225	VM51L02G-4DP225	VM51L02G-4DM225
	0.3 - 1 - 3 - 10	√	√	100	VM51L02G-4DP100-W	VM51L02G-4DM100-W
				125	VM51L02G-4DP125-W	VM51L02G-4DM125-W
				140	VM51L02G-4DP140-W	VM51L02G-4DM140-W
				160	VM51L02G-4DP160-W	VM51L02G-4DM160-W
				180	VM51L02G-4DP180-W	VM51L02G-4DM180-W
				200	VM51L02G-4DP200-W	VM51L02G-4DM200-W
				225	VM51L02G-4DP225-W	VM51L02G-4DM225-W
A	0.1 - 0.3 - 0.5	√	√	100	VM51L02G-4DP100-A	VM51L02G-4DM100-A
				125	VM51L02G-4DP125-A	VM51L02G-4DM125-A
				140	VM51L02G-4DP140-A	VM51L02G-4DM140-A
				160	VM51L02G-4DP160-A	VM51L02G-4DM160-A
				180	VM51L02G-4DP180-A	VM51L02G-4DM180-A
				200	VM51L02G-4DP200-A	VM51L02G-4DM200-A
				225	VM51L02G-4DP225-A	VM51L02G-4DM225-A

Selection and ordering data

Type of residual current	Rated residual current IΔn Adjustable	Tripping characteristics for residual current: Instantaneous	Tripping characteristics for residual current: Time-delayed Adjustable	Rated current In	For power distribution	For motor protection
	(mA)			(A)	Type code	Type code
Neutral unprotected, G: Icu = 50 kA, Ics = 35 kA						
AC	0.03 - 0.1 - 0.3 - 0.5	√		100	VM51L02G-4BP100-U	VM51L02G-4BM100-U
				125	VM51L02G-4BP125-U	VM51L02G-4BM125-U
				140	VM51L02G-4BP140-U	VM51L02G-4BM140-U
				160	VM51L02G-4BP160-U	VM51L02G-4BM160-U
				180	VM51L02G-4BP180-U	VM51L02G-4BM180-U
				200	VM51L02G-4BP200-U	VM51L02G-4BM200-U
				225	VM51L02G-4BP225-U	VM51L02G-4BM225-U
	0.1 - 0.3 - 0.5	√	√	100	VM51L02G-4BP100	VM51L02G-4BM100
				125	VM51L02G-4BP125	VM51L02G-4BM125
				140	VM51L02G-4BP140	VM51L02G-4BM140
				160	VM51L02G-4BP160	VM51L02G-4BM160
				180	VM51L02G-4BP180	VM51L02G-4BM180
				200	VM51L02G-4BP200	VM51L02G-4BM200
				225	VM51L02G-4BP225	VM51L02G-4BM225
	0.3 - 1 - 3 - 10	√	√	100	VM51L02G-4BP100-W	VM51L02G-4BM100-W
				125	VM51L02G-4BP125-W	VM51L02G-4BM125-W
				140	VM51L02G-4BP140-W	VM51L02G-4BM140-W
				160	VM51L02G-4BP160-W	VM51L02G-4BM160-W
				180	VM51L02G-4BP180-W	VM51L02G-4BM180-W
				200	VM51L02G-4BP200-W	VM51L02G-4BM200-W
				225	VM51L02G-4BP225-W	VM51L02G-4BM225-W
A	0.1 - 0.3 - 0.5	√	√	100	VM51L02G-4BP100-A	VM51L02G-4BM100-A
				125	VM51L02G-4BP125-A	VM51L02G-4BM125-A
				140	VM51L02G-4BP140-A	VM51L02G-4BM140-A
				160	VM51L02G-4BP160-A	VM51L02G-4BM160-A
				180	VM51L02G-4BP180-A	VM51L02G-4BM180-A
				200	VM51L02G-4BP200-A	VM51L02G-4BM200-A
				225	VM51L02G-4BP225-A	VM51L02G-4BM225-A
Neutral protected, G: Icu = 50 kA, Ics = 35 kA						
AC	0.03 - 0.1 - 0.3 - 0.5	√		100	VM51L02G-4CP100-U	VM51L02G-4CM100-U
				125	VM51L02G-4CP125-U	VM51L02G-4CM125-U
				140	VM51L02G-4CP140-U	VM51L02G-4CM140-U
				160	VM51L02G-4CP160-U	VM51L02G-4CM160-U
				180	VM51L02G-4CP180-U	VM51L02G-4CM180-U
				200	VM51L02G-4CP200-U	VM51L02G-4CM200-U
				225	VM51L02G-4CP225-U	VM51L02G-4CM225-U
	0.1 - 0.3 - 0.5	√	√	100	VM51L02G-4CP100	VM51L02G-4CM100
				125	VM51L02G-4CP125	VM51L02G-4CM125
				140	VM51L02G-4CP140	VM51L02G-4CM140
				160	VM51L02G-4CP160	VM51L02G-4CM160
				180	VM51L02G-4CP180	VM51L02G-4CM180
				200	VM51L02G-4CP200	VM51L02G-4CM200
				225	VM51L02G-4CP225	VM51L02G-4CM225
	0.3 - 1 - 3 - 10	√	√	100	VM51L02G-4CP100-W	VM51L02G-4CM100-W
				125	VM51L02G-4CP125-W	VM51L02G-4CM125-W
				140	VM51L02G-4CP140-W	VM51L02G-4CM140-W
				160	VM51L02G-4CP160-W	VM51L02G-4CM160-W
				180	VM51L02G-4CP180-W	VM51L02G-4CM180-W
				200	VM51L02G-4CP200-W	VM51L02G-4CM200-W
				225	VM51L02G-4CP225-W	VM51L02G-4CM225-W
A	0.1 - 0.3 - 0.5	√	√	100	VM51L02G-4CP100-A	VM51L02G-4CM100-A
				125	VM51L02G-4CP125-A	VM51L02G-4CM125-A
				140	VM51L02G-4CP140-A	VM51L02G-4CM140-A
				160	VM51L02G-4CP160-A	VM51L02G-4CM160-A
				180	VM51L02G-4CP180-A	VM51L02G-4CM180-A
				200	VM51L02G-4CP200-A	VM51L02G-4CM200-A
				225	VM51L02G-4CP225-A	VM51L02G-4CM225-A

Selection and ordering data

Type of residual current	Rated residual current IΔn Adjustable	Tripping characteristics for residual current		Rated current In	For power distribution	For motor protection
		Instantaneous	Time-delayed Adjustable			
	(mA)			(A)	Type code	Type code
G: Icu = 50 kA, Ics = 35 kA						
AC	0.1 - 0.3 - 0.5	√	√	225	VM51L04G-3P225	VM51L04G-3M225
				250	VM51L04G-3P250	VM51L04G-3M250
				315	VM51L04G-3P315	VM51L04G-3M315
				350	VM51L04G-3P350	VM51L04G-3M350
				400	VM51L04G-3P400	VM51L04G-3M400
	1 - 3 - 10 - 30	√	√	225	VM51L04G-3P225-W	VM51L04G-3M225-W
				250	VM51L04G-3P250-W	VM51L04G-3M250-W
				315	VM51L04G-3P315-W	VM51L04G-3M315-W
				350	VM51L04G-3P350-W	VM51L04G-3M350-W
				400	VM51L04G-3P400-W	VM51L04G-3M400-W
A	0.1 - 0.3 - 0.5	√	√	225	VM51L04G-3P225-A	VM51L04G-3M225-A
				250	VM51L04G-3P250-A	VM51L04G-3M250-A
				315	VM51L04G-3P315-A	VM51L04G-3M315-A
				350	VM51L04G-3P350-A	VM51L04G-3M350-A
				400	VM51L04G-3P400-A	VM51L04G-3M400-A
H: Icu = 65 kA, Ics = 42 kA						
AC	0.1 - 0.3 - 0.5	√	√	225	VM51L04H-3P225	VM51L04H-3M225
				250	VM51L04H-3P250	VM51L04H-3M250
				315	VM51L04H-3P315	VM51L04H-3M315
				350	VM51L04H-3P350	VM51L04H-3M350
				400	VM51L04H-3P400	VM51L04H-3M400
	1 - 3 - 10 - 30	√	√	225	VM51L04H-3P225-W	VM51L04H-3M225-W
				250	VM51L04H-3P250-W	VM51L04H-3M250-W
				315	VM51L04H-3P315-W	VM51L04H-3M315-W
				350	VM51L04H-3P350-W	VM51L04H-3M350-W
				400	VM51L04H-3P400-W	VM51L04H-3M400-W
A	0.1 - 0.3 - 0.5	√	√	225	VM51L04H-3P225-A	VM51L04H-3M225-A
				250	VM51L04H-3P250-A	VM51L04H-3M250-A
				315	VM51L04H-3P315-A	VM51L04H-3M315-A
				350	VM51L04H-3P350-A	VM51L04H-3M350-A
				400	VM51L04H-3P400-A	VM51L04H-3M400-A

Selection and ordering data

Type of residual current	Rated residual current IΔn Adjustable	Tripping characteristics for residual current		Rated current In	For power distribution	For motor protection
		Instantaneous	Time-delayed Adjustable			
	(mA)			(A)	Type code	Type code
4 pole - 3 trips, Neutral unprotected, G: Icu = 50 kA, Ics = 35 kA						
AC	0.1 - 0.3 - 0.5	√	√	225	VM51L04G-4AP225	VM51L04G-4AM225
				250	VM51L04G-4AP250	VM51L04G-4AM250
				315	VM51L04G-4AP315	VM51L04G-4AM315
				350	VM51L04G-4AP350	VM51L04G-4AM350
				400	VM51L04G-4AP400	VM51L04G-4AM400
	1 - 3 - 10 - 30	√	√	225	VM51L04G-4AP225-W	VM51L04G-4AM225-W
				250	VM51L04G-4AP250-W	VM51L04G-4AM250-W
				315	VM51L04G-4AP315-W	VM51L04G-4AM315-W
				350	VM51L04G-4AP350-W	VM51L04G-4AM350-W
				400	VM51L04G-4AP400-W	VM51L04G-4AM400-W
A	0.1 - 0.3 - 0.5	√	√	225	VM51L04G-4AP225-A	VM51L04G-4AM225-A
				250	VM51L04G-4AP250-A	VM51L04G-4AM250-A
				315	VM51L04G-4AP315-A	VM51L04G-4AM315-A
				350	VM51L04G-4AP350-A	VM51L04G-4AM350-A
				400	VM51L04G-4AP400-A	VM51L04G-4AM400-A
4 pole - 3 trips, Neutral protected, G: Icu = 50 kA, Ics = 35 kA						
AC	0.1 - 0.3 - 0.5	√	√	225	VM51L04G-4DP225	VM51L04G-4DM225
				250	VM51L04G-4DP250	VM51L04G-4DM250
				315	VM51L04G-4DP315	VM51L04G-4DM315
				350	VM51L04G-4DP350	VM51L04G-4DM350
				400	VM51L04G-4DP400	VM51L04G-4DM400
	1 - 3 - 10 - 30	√	√	225	VM51L04G-4DP225-W	VM51L04G-4DM225-W
				250	VM51L04G-4DP250-W	VM51L04G-4DM250-W
				315	VM51L04G-4DP315-W	VM51L04G-4DM315-W
				350	VM51L04G-4DP350-W	VM51L04G-4DM350-W
				400	VM51L04G-4DP400-W	VM51L04G-4DM400-W
A	0.1 - 0.3 - 0.5	√	√	225	VM51L04G-4DP225-A	VM51L04G-4DM225-A
				250	VM51L04G-4DP250-A	VM51L04G-4DM250-A
				315	VM51L04G-4DP315-A	VM51L04G-4DM315-A
				350	VM51L04G-4DP350-A	VM51L04G-4DM350-A
				400	VM51L04G-4DP400-A	VM51L04G-4DM400-A
4 pole - 4 trips, Neutral unprotected, G: Icu = 50 kA, Ics = 35 kA						
AC	0.1 - 0.3 - 0.5	√	√	225	VM51L04G-4BP225	VM51L04G-4BM225
				250	VM51L04G-4BP250	VM51L04G-4BM250
				315	VM51L04G-4BP315	VM51L04G-4BM315
				350	VM51L04G-4BP350	VM51L04G-4BM350
				400	VM51L04G-4BP400	VM51L04G-4BM400
	1 - 3 - 10 - 30	√	√	225	VM51L04G-4BP225-W	VM51L04G-4BM225-W
				250	VM51L04G-4BP250-W	VM51L04G-4BM250-W
				315	VM51L04G-4BP315-W	VM51L04G-4BM315-W
				350	VM51L04G-4BP350-W	VM51L04G-4BM350-W
				400	VM51L04G-4BP400-W	VM51L04G-4BM400-W
A	0.1 - 0.3 - 0.5	√	√	225	VM51L04G-4BP225-A	VM51L04G-4BM225-A
				250	VM51L04G-4BP250-A	VM51L04G-4BM250-A
				315	VM51L04G-4BP315-A	VM51L04G-4BM315-A
				350	VM51L04G-4BP350-A	VM51L04G-4BM350-A
				400	VM51L04G-4BP400-A	VM51L04G-4BM400-A
4 pole - 4 trips, Neutral protected, G: Icu = 50 kA, Ics = 35 kA						
AC	0.1 - 0.3 - 0.5	√	√	225	VM51L04G-4CP225	VM51L04G-4CM225
				250	VM51L04G-4CP250	VM51L04G-4CM250
				315	VM51L04G-4CP315	VM51L04G-4CM315
				350	VM51L04G-4CP350	VM51L04G-4CM350
				400	VM51L04G-4CP400	VM51L04G-4CM400
	1 - 3 - 10 - 30	√	√	225	VM51L04G-4CP225-W	VM51L04G-4CM225-W
				250	VM51L04G-4CP250-W	VM51L04G-4CM250-W
				315	VM51L04G-4CP315-W	VM51L04G-4CM315-W
				350	VM51L04G-4CP350-W	VM51L04G-4CM350-W
				400	VM51L04G-4CP400-W	VM51L04G-4CM400-W
A	0.1 - 0.3 - 0.5	√	√	225	VM51L04G-4CP225-A	VM51L04G-4CM225-A
				250	VM51L04G-4CP250-A	VM51L04G-4CM250-A
				315	VM51L04G-4CP315-A	VM51L04G-4CM315-A
				350	VM51L04G-4CP350-A	VM51L04G-4CM350-A
				400	VM51L04G-4CP400-A	VM51L04G-4CM400-A

Selection and ordering data

Type of residual current	Rated residual current IΔn Adjustable	Tripping characteristics for residual current		Rated current In	For power distribution	For motor protection
		Instantaneous	Time-delayed Adjustable			
	(mA)			(A)	Type code	Type code
3-pole, G: Icu= 50 kA, Ics = 35 kA						
AC	0.3 - 0.5 - 1	√	√	400	VM51L06G-3P400	VM51L06G-3M400
				500	VM51L06G-3P500	VM51L06G-3M500
				630	VM51L06G-3P630	VM51L06G-3M630
	1 - 3 - 10 - 30	√	√	400	VM51L06G-3P400-W	VM51L06G-3M400-W
				500	VM51L06G-3P500-W	VM51L06G-3M500-W
				630	VM51L06G-3P630-W	VM51L06G-3M630-W
A	0.3 - 0.5 - 1	√	√	400	VM51L06G-3P400-A	VM51L06G-3M400-A
				500	VM51L06G-3P500-A	VM51L06G-3M500-A
				630	VM51L06G-3P630-A	VM51L06G-3M630-A
3-pole, H: Icu= 65 kA, Ics = 42 kA						
AC	0.3 - 0.5 - 1	√	√	400	VM51L06H-3P400	VM51L06H-3M400
				500	VM51L06H-3P500	VM51L06H-3M500
				630	VM51L06H-3P630	VM51L06H-3M630
	1 - 3 - 10 - 30	√	√	400	VM51L06H-3P400-W	VM51L06H-3M400-W
				500	VM51L06H-3P500-W	VM51L06H-3M500-W
				630	VM51L06H-3P630-W	VM51L06H-3M630-W
A	0.3 - 0.5 - 1	√	√	400	VM51L06H-3P400-A	VM51L06H-3M400-A
				500	VM51L06H-3P500-A	VM51L06H-3M500-A
				630	VM51L06H-3P630-A	VM51L06H-3M630-A
4 pole - 3 trips, Neutral unprotected, G: Icu = 50 kA, Ics = 35 kA						
AC	0.3 - 0.5 - 1	√	√	400	VM51L06G-4AP400	VM51L06G-4AM400
				500	VM51L06G-4AP500	VM51L06G-4AM500
				630	VM51L06G-4AP630	VM51L06G-4AM630
	1 - 3 - 10 - 30	√	√	400	VM51L06G-4AP400-W	VM51L06G-4AM400-W
				500	VM51L06G-4AP500-W	VM51L06G-4AM500-W
				630	VM51L06G-4AP630-W	VM51L06G-4AM630-W
A	0.3 - 0.5 - 1	√	√	400	VM51L06G-4AP400-A	VM51L06G-4AM400-A
				500	VM51L06G-4AP500-A	VM51L06G-4AM500-A
				630	VM51L06G-4AP630-A	VM51L06G-4AM630-A
4 pole - 3 trips, Neutral protected, G: Icu = 50 kA, Ics = 35 kA						
AC	0.3 - 0.5 - 1	√	√	400	VM51L06G-4DP400	VM51L06G-4DM400
				500	VM51L06G-4DP500	VM51L06G-4DM500
				630	VM51L06G-4DP630	VM51L06G-4DM630
	1 - 3 - 10 - 30	√	√	400	VM51L06G-4DP400-W	VM51L06G-4DM400-W
				500	VM51L06G-4DP500-W	VM51L06G-4DM500-W
				630	VM51L06G-4DP630-W	VM51L06G-4DM630-W
A	0.3 - 0.5 - 1	√	√	400	VM51L06G-4DP400-A	VM51L06G-4DM400-A
				500	VM51L06G-4DP500-A	VM51L06G-4DM500-A
				630	VM51L06G-4DP630-A	VM51L06G-4DM630-A
4 pole - 4 trips, Neutral unprotected, G: Icu = 50 kA, Ics = 35 kA						
AC	0.3 - 0.5 - 1	√	√	400	VM51L06G-4BP400	VM51L06G-4BM400
				500	VM51L06G-4BP500	VM51L06G-4BM500
				630	VM51L06G-4BP630	VM51L06G-4BM630
	1 - 3 - 10 - 30	√	√	400	VM51L06G-4BP400-W	VM51L06G-4BM400-W
				500	VM51L06G-4BP500-W	VM51L06G-4BM500-W
				630	VM51L06G-4BP630-W	VM51L06G-4BM630-W
A	0.3 - 0.5 - 1	√	√	400	VM51L06G-4BP400-A	VM51L06G-4BM400-A
				500	VM51L06G-4BP500-A	VM51L06G-4BM500-A
				630	VM51L06G-4BP630-A	VM51L06G-4BM630-A
4 pole - 4 trips, Neutral protected, G: Icu = 50 kA, Ics = 35 kA						
AC	0.3 - 0.5 - 1	√	√	400	VM51L06G-4CP400	VM51L06G-4CM400
				500	VM51L06G-4CP500	VM51L06G-4CM500
				630	VM51L06G-4CP630	VM51L06G-4CM630
	1 - 3 - 10 - 30	√	√	400	VM51L06G-4CP400-W	VM51L06G-4CM400-W
				500	VM51L06G-4CP500-W	VM51L06G-4CM500-W
				630	VM51L06G-4CP630-W	VM51L06G-4CM630-W
A	0.3 - 0.5 - 1	√	√	400	VM51L06G-4CP400-A	VM51L06G-4CM400-A
				500	VM51L06G-4CP500-A	VM51L06G-4CM500-A
				630	VM51L06G-4CP630-A	VM51L06G-4CM630-A

GENERAL

- Control device: built-in controller
- Product structure: small size, high current, simple structure, ATS integration
- Feature: fast switching speed, low failure rate, convenient maintenance, reliable performance
- Connection: front connection
- Conversion mode: power on the grid, grid generator, auto-charge & auto-recovery
- Frame current: 63
- Product current: 10, 16, 20, 25, 32, 40, 50, 63 A
- Product classification: circuit breaker
- Pole No.: 2, 3, 4



Wiring principle drawing

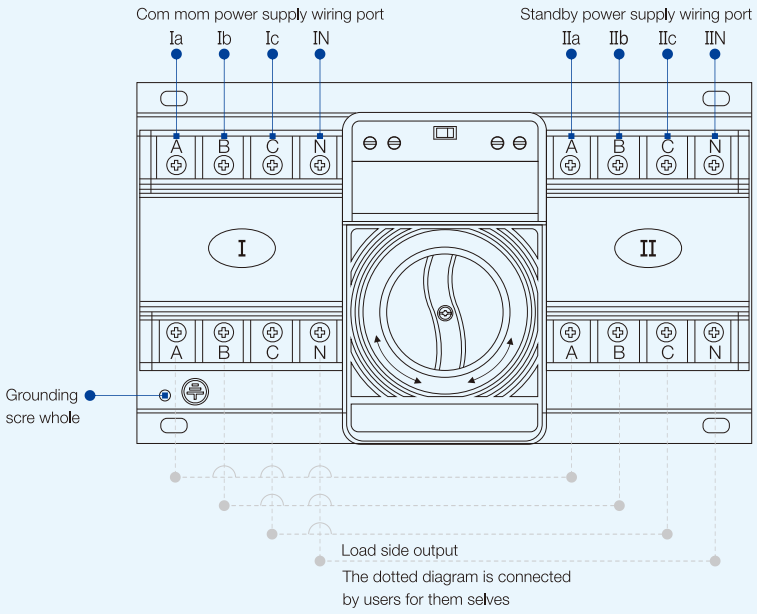

Note: the external signal port of the users:

- Basic type
  - Product standard port of out of factory (101-103, 201-203) signal lamp;
  - Users according to the requirement to connect by themselves.
- Basic fire-fighting type (X type)
  - Product standard port of out of factory (101-103, 201-203) signal lamp, (304-305) fire-fighting port;
  - Users according to the requirement to connect by themselves.
- Basic fire-fighting, generation, feedback type (XFZ type)
  - Product standard port of out of factory (101-103, 201-203) signal lamp, (304-305) fire-fighting, (104-105, 204-205) feedback, (301-303) generation;
  - Users according to the requirement to connect by themselves.

3

Wiring principle drawing

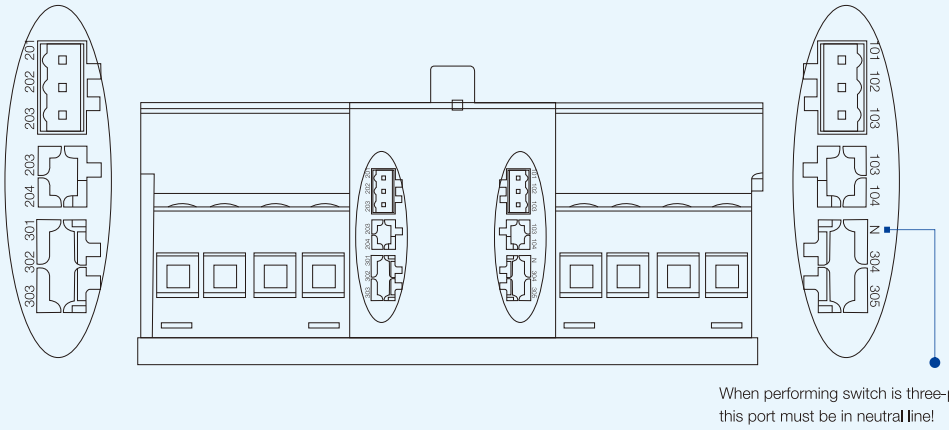

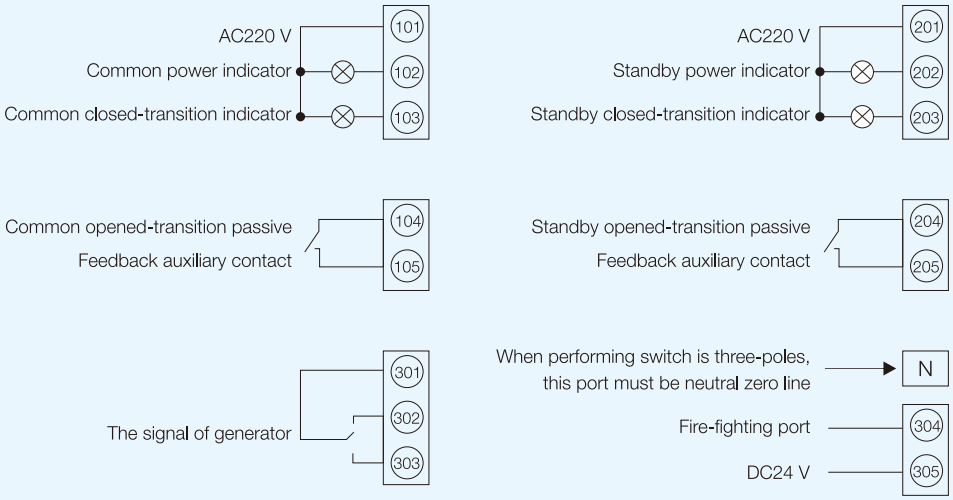

Selection and ordering data

	Rated current (A)	2P Type code	3P Type code	4P Type code
PAQ6...B	**Basic type**			
	For Grid-Grid applications			
	10	VAQ51B-2-C10	VAQ51B-3-C10	VAQ51B-4-C10
	16	VAQ51B-2-C16	VAQ51B-3-C16	VAQ51B-4-C16
	20	VAQ51B-2-C20	VAQ51B-3-C20	VAQ51B-4-C20
	25	VAQ51B-2-C25	VAQ51B-3-C25	VAQ51B-4-C25
	32	VAQ51B-2-C32	VAQ51B-3-C32	VAQ51B-4-C32
	40	VAQ51B-2-C40	VAQ51B-3-C40	VAQ51B-4-C40
	50	VAQ51B-2-C50	VAQ51B-3-C50	VAQ51B-4-C50
	63	VAQ51B-2-C63	VAQ51B-3-C63	VAQ51B-4-C63
	Emergency OFF with 24 V DC signal input			
	For Grid-Grid applications			
	10	VAQ51B-2-C10-X	VAQ51B-3-C10-X	VAQ51B-4-C10-X
	16	VAQ51B-2-C16-X	VAQ51B-3-C16-X	VAQ51B-4-C16-X
	20	VAQ51B-2-C20-X	VAQ51B-3-C20-X	VAQ51B-4-C20-X
	25	VAQ51B-2-C25-X	VAQ51B-3-C25-X	VAQ51B-4-C25-X
	32	VAQ51B-2-C32-X	VAQ51B-3-C32-X	VAQ51B-4-C32-X
	40	VAQ51B-2-C40-X	VAQ51B-3-C40-X	VAQ51B-4-C40-X
	50	VAQ51B-2-C50-X	VAQ51B-3-C50-X	VAQ51B-4-C50-X
	63	VAQ51B-2-C63-X	VAQ51B-3-C63-X	VAQ51B-4-C63-X
	Emergency OFF with 24 V DC signal input Switch position signal			
	For Grid-Grid and Grid-Generator applications			
	10	VAQ51B-2-C10-XFZ	VAQ51B-3-C10-XFZ	VAQ51B-4-C10-XFZ
	16	VAQ51B-2-C16-XFZ	VAQ51B-3-C16-XFZ	VAQ51B-4-C16-XFZ
	20	VAQ51B-2-C20-XFZ	VAQ51B-3-C20-XFZ	VAQ51B-4-C20-XFZ
	25	VAQ51B-2-C25-XFZ	VAQ51B-3-C25-XFZ	VAQ51B-4-C25-XFZ
	32	VAQ51B-2-C32-XFZ	VAQ51B-3-C32-XFZ	VAQ51B-4-C32-XFZ
	40	VAQ51B-2-C40-XFZ	VAQ51B-3-C40-XFZ	VAQ51B-4-C40-XFZ
	50	VAQ51B-2-C50-XFZ	VAQ51B-3-C50-XFZ	VAQ51B-4-C50-XFZ
	63	VAQ51B-2-C63-XFZ	VAQ51B-3-C63-XFZ	VAQ51B-4-C63-XFZ

Overall and installation dimension

2P

unit in mm

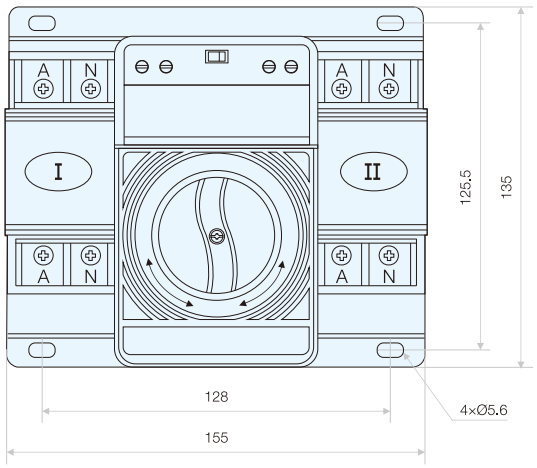

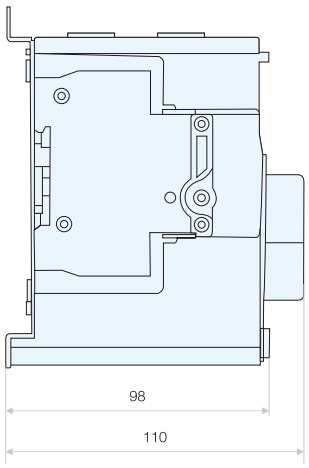

3

Overall and installation dimension

3P

unit in mm

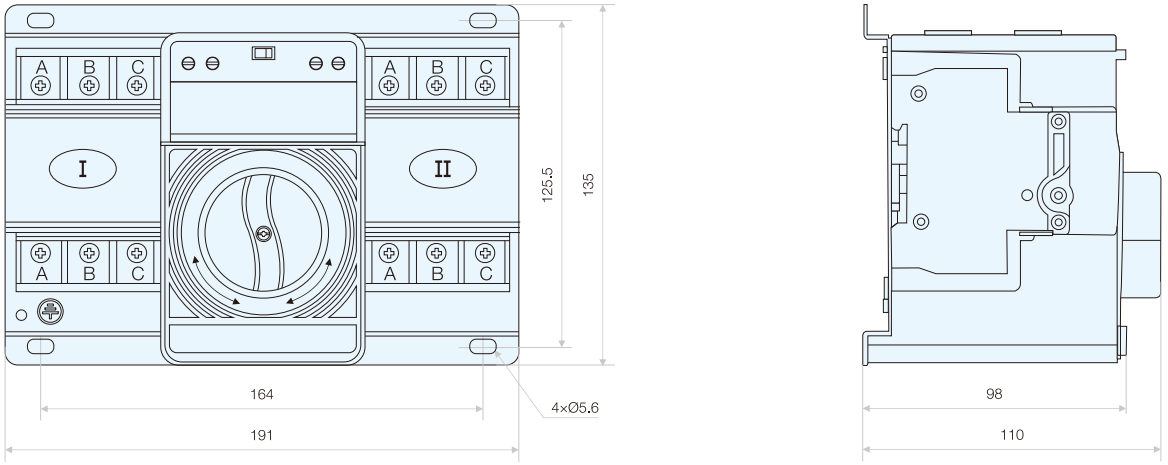

4P

unit in mm

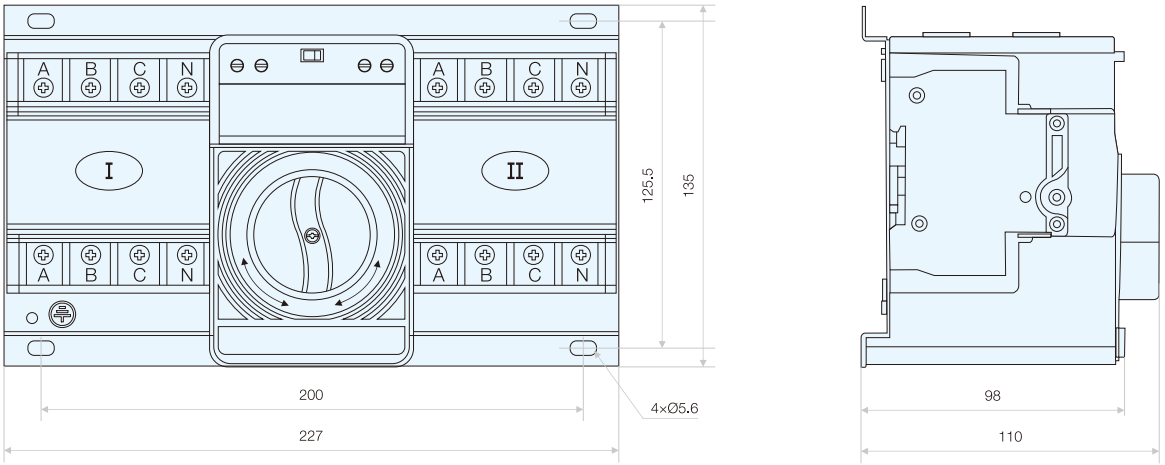

Functions

- Overload protection
- Short circuit protection
- Isolation
- Controlling
- Used in residential building, non-residential building, industry, energy and infrastructure.



Technical specifications

- Standards: IEC 60898-1
- Rated current In (A): 6, 10, 16, 20, 25, 32, 40, 50, 63
- Rated voltage Un (V AC): 1P: 230/400; 2-4P: 400
- Operational voltage (V AC): Min. : 24; Max. : 250/440
- Rated frequency (Hz): 50/60
- Rated insulation voltage (V AC):
  - Phase to ground: 250
  - Phase to phase: 500
- Number of poles (P): 1, 2, 3, 4, 1P+N, 3P+N
- Tripping characteristic:
  - Characteristic B (In): 3-5
  - Characteristic C (In): 5-10
  - Characteristic D (In): 10-20
- Thermal operating limit (In): 1.13 - 1.45
- Degree of protection: IP20, with connected conductors
- Electrical endurance (Cycles): 6,000
- Mechanical endurance (Cycles): 20,000
- Breaking capacity: 6 kA
- Fire resistance according to IEC 60695: 960 °C
- Busbar connection: Pin type
- Mounting position: Any
- Conductor cross-sections
  - Solid and stranded (mm^2): 1-35
  - Finely stranded with end sleeve (mm^2): 1-16
- Terminal tightening torque (N·m): 2.5
- Ambient temperature (°C): -5 ~ +40, max. 95 % humidity
- Altitude (meters): Max. 2000

Features

- The handle being sealable or equipped with padlock bracket avoids dangerous operation changes (ON / OFF)
- Clear indication of the contact position
- Energy limiting class: 3
- The emission of ionized gases is limited to the severest restrictions: 45 mm grid distance
- Suitable for household or similar applications in accordance with: IEC 60898-1, tripping characteristics B, C and D.

Outline and installation dimensions

unit in mm

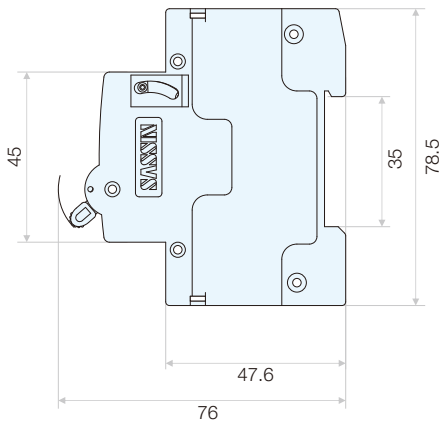

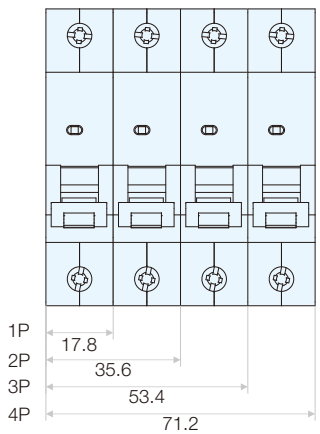

Selection and ordering data









Number of poles	Rated current In (A)	Characteristic B	Characteristic C	Characteristic D
		Type code	Type code	Type code
1P	6	VB511-B6	VB511-C6	VB511-D6
	10	VB511-B10	VB511-C10	VB511-D10
	16	VB511-B16	VB511-C16	VB511-D16
	20	VB511-B20	VB511-C20	VB511-D20
	25	VB511-B25	VB511-C25	VB511-D25
	32	VB511-B32	VB511-C32	VB511-D32
	40	VB511-B40	VB511-C40	VB511-D40
	50	VB511-B50	VB511-C50	VB511-D50
	63	VB511-B63	VB511-C63	VB511-D63
1P+N	6	VB515-B6	VB515-C6	VB515-D6
	10	VB515-B10	VB515-C10	VB515-D10
	16	VB515-B16	VB515-C16	VB515-D16
	20	VB515-B20	VB515-C20	VB515-D20
	25	VB515-B25	VB515-C25	VB515-D25
	32	VB515-B32	VB515-C32	VB515-D32
	40	VB515-B40	VB515-C40	VB515-D40
	50	VB515-B50	VB515-C50	VB515-D50
	63	VB515-B63	VB515-C63	VB515-D63
2P	6	VB512-B6	VB512-C6	VB512-D6
	10	VB512-B10	VB512-C10	VB512-D10
	16	VB512-B16	VB512-C16	VB512-D16
	20	VB512-B20	VB512-C20	VB512-D20
	25	VB512-B25	VB512-C25	VB512-D25
	32	VB512-B32	VB512-C32	VB512-D32
	40	VB512-B40	VB512-C40	VB512-D40
	50	VB512-B50	VB512-C50	VB512-D50
	63	VB512-B63	VB512-C63	VB512-D63
3P	6	VB513-B6	VB513-C6	VB513-D6
	10	VB513-B10	VB513-C10	VB513-D10
	16	VB513-B16	VB513-C16	VB513-D16
	20	VB513-B20	VB513-C20	VB513-D20
	25	VB513-B25	VB513-C25	VB513-D25
	32	VB513-B32	VB513-C32	VB513-D32
	40	VB513-B40	VB513-C40	VB513-D40
	50	VB513-B50	VB513-C50	VB513-D50
	63	VB513-B63	VB513-C63	VB513-D63
3P+N	6	VB516-B6	VB516-C6	VB516-D6
	10	VB516-B10	VB516-C10	VB516-D10
	16	VB516-B16	VB516-C16	VB516-D16
	20	VB516-B20	VB516-C20	VB516-D20
	25	VB516-B25	VB516-C25	VB516-D25
	32	VB516-B32	VB516-C32	VB516-D32
	40	VB516-B40	VB516-C40	VB516-D40
	50	VB516-B50	VB516-C50	VB516-D50
	63	VB516-B63	VB516-C63	VB516-D63
4P	6	VB514-B6	VB514-C6	VB514-D6
	10	VB514-B10	VB514-C10	VB514-D10
	16	VB514-B16	VB514-C16	VB514-D16
	20	VB514-B20	VB514-C20	VB514-D20
	25	VB514-B25	VB514-C25	VB514-D25
	32	VB514-B32	VB514-C32	VB514-D32
	40	VB514-B40	VB514-C40	VB514-D40
	50	VB514-B50	VB514-C50	VB514-D50
	63	VB514-B63	VB514-C63	VB514-D63

Functions

- Overload protection
- Short circuit protection
- Isolation both for phase and neutral line
- Controlling
- Used for the protection of plants with switched neutral
- Used in residential buildings



Technical specifications

- Standard: IEC 60898-1
- Rated current In (A): 6, 10, 16, 20, 25, 32, 40
- Rated voltage Un (V AC): 230
- Rated frequency (Hz): 50/60
- Operational voltage Min/Max (V AC): 24/250
- Number of pole: 1P+N (1 modular width)
- Tripping characteristic: B, C
- Characteristic B (In): 3-5
- Characteristic C (In): 5-10
- Thermal operating limit: 1.13-1.45 In
- Rated switching capacity Icn (kA): 6
- Degree of protection: IP40, housing; IP20, terminals
- Electrical life (times): 10000
- Mechanical life (times): 20000
- Mounting position: No significant vibration and shock
- Connection capacity (mm^2): 1-10
- Terminal tightening torque (N·m): 2.0
- Ambient temperature (°C): +20, max. 95 % humidity;
  +40, max. 50 % humidity
- Storage temperature (°C): -30 ~ +70
- Altitude (meters): Max. 2000

Features

- 1P+N with switched neutral line in 1 module of 18 mm width, up to 40 A, rated breaking capacity 6 kA
- Current-limiting contact system and magnetic blow-out arc extinguishing device, avoiding products and equipment to bear large short-circuit current, improving the arc extinguishing ability of the product, and ensuring the breaking capacity
- The handle being sealable or equipped with padlock bracket avoids dangerous operation changes (ON/OFF)
- This MCB for household in accordance with: IEC 60898-1, B, C tripping characteristics
- Full sets of accessories

Selection and ordering data

IEC 60898-1 6 kA

	Number of poles	Rated current In (A)	Characteristic B Type code	Characteristic C Type code
 	1P+N	6	VBN515-B6	VBN515-C6
		10	VBN515-B10	VBN515-C10
		16	VBN515-B16	VBN515-C16
		20	VBN515-B20	VBN515-C20
		25	VBN515-B25	VBN515-C25
		32	VBN515-B32	VBN515-C32
		40	VBN515-B40	VBN515-C40

DPN Miniature Circuit Breakers
Series VBN515

Tripping characteristic curves

Characteristic B

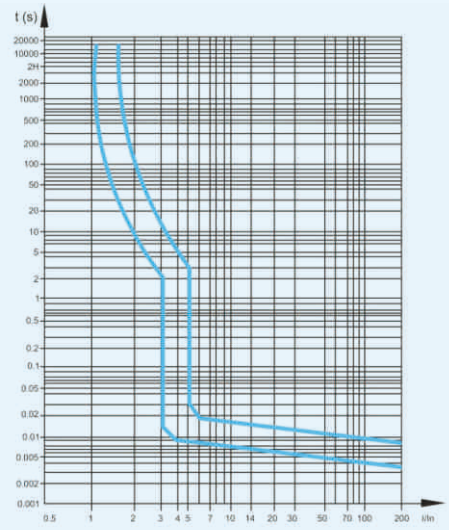

Characteristic C

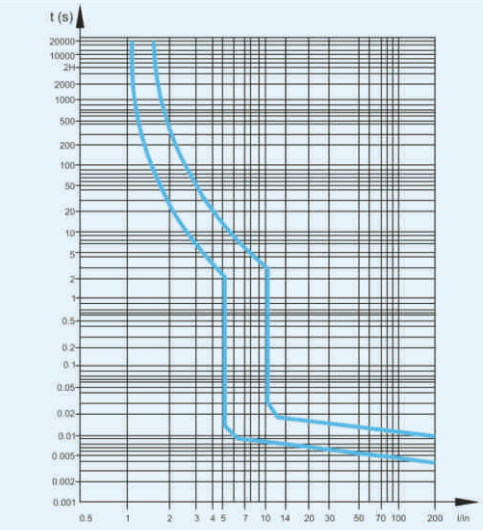

Magnetic release

An electromagnet with plunger ensures instantaneous tripping in case of short circuit. The IEC 60898-1 distinguishes three different types, following the current for instantaneous release: type B, C

	Test current	Tripping time	Applications
B	3 In	0.1 < t < 45 s (In ≤ 32 A) 0.1 < t < 90 s (In > 32 A)	Only for resistive loads such as: - electrical heating - water heater
	5 In	t < 0.1 s	- stoves
C	5 In	0.1 < t < 15 s (In ≤ 32 A) 0.1 < t < 30 s (In > 32 A)	Usual loads such as: - lighting - socket outlets
	10 In	t < 0.1 s	- small motors

Thermal release

- The release is initiated by a bimetal strip in case of overload
- The standard defines the range of release for specific overload values
- Reference ambient temperature is 30 °C

Test current	Tripping time
1.13 In	t ≥ 1 h (In ≤ 63 A)
1.45 In	t < 1 h (In ≤ 63 A)
2.55 In	1s < t < 60 s (In ≤ 32 A) 1s < t < 120 s (In > 32 A)

Outline and installation dimensions

unit in mm

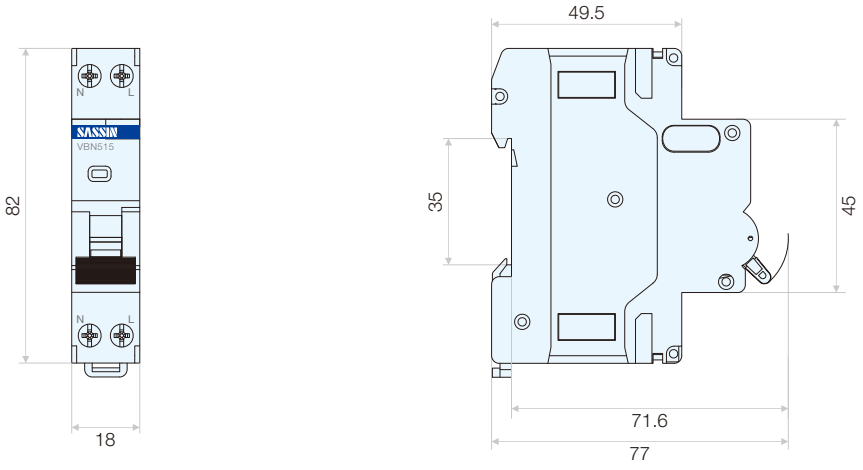

Functions

- Overload protection
- Short circuit protection
- Isolation
- Used in residential building, non-residential building, energy sources, industry and infrastructure.



Technical specifications

- Standard: IEC 60947-2
- Rated current In (A): 63, 80, 100, 125
- Rated voltage Un (V AC): 230/400
- Operational voltage (V AC):
  - Min.: 24
  - Max.: 250/440
- Rated insulation voltage (V AC): 500
- Number of poles: 1, 2, 3, 4
- Tripping characteristics: C, D
  - release B (In): 4
  - release C (In): 8
  - release D (In): 14
- Thermal operating limit (In): 1.05 - 1.30
- Electrical life (times): 4,000
- Mechanical life (times): 20,000
- Breaking capacity:

Model	Rated voltage		Acc. to IEC 60947-2	
			Icn	Ics
	(V)		(kA)	(kA)
VBH510	1P	230/400	6	6
	2-4P	400	6	6

- Degree of protection: IP20, with connected conductors
- Mounting position: Any
- Conductor cross-sections
  - Solid and stranded (mm^2): 1-50
  - Finely stranded with end sleeve (mm^2): 1-35
- Terminal tightening torque (N·m): 3.5
- Ambient temperature (°C): -5 ~ +45, max. 95 % humidity
- Storage temperature (°C): -40 ~ +75
- Altitude (meters): Max. 2,000
- Connection capacity (mm^2): 1-35

Features

- Rated current up to 125 A
- The handle being sealable or equipped with padlock bracket avoids dangerous operation changes (ON / OFF)
- Adequate printing of all data on the front provides long-term identification
- This MCB for industry in accordance with: IEC 60947-2 instantaneous tripping release C: 8 In , release D: 12 In
- This MCB may be extended with:
  - Full sets of additional components
  - Full sets of accessories

Add-on devices

Auxiliaries

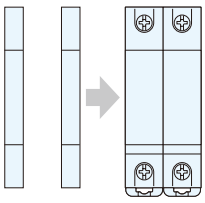

3

Selection and ordering data

IEC 60947-2 6 kA

Number of poles	Rated current In (A)	Characteristic C	Characteristic D
		Type code	Type code
1	63	VBH511-C63	VBH511-D63
	70	VBH511-C70	VBH511-D70
	80	VBH511-C80	VBH511-D80
	100	VBH511-C100	VBH511-D100
	125	VBH511-C125	VBH511-D125
2	63	VBH512-C63	VBH512-D63
	70	VBH512-C70	VBH512-D70
	80	VBH512-C80	VBH512-D80
	100	VBH512-C100	VBH512-D100
	125	VBH512-C125	VBH512-D125
3	63	VBH513-C63	VBH513-D63
	70	VBH513-C70	VBH513-D70
	80	VBH513-C80	VBH513-D80
	100	VBH513-C100	VBH513-D100
	125	VBH513-C125	VBH513-D125
4	63	VBH514-C63	VBH514-D63
	70	VBH514-C70	VBH514-D70
	80	VBH514-C80	VBH514-D80
	100	VBH514-C100	VBH514-D100
	125	VBH514-C125	VBH514-D125

Outline and installation dimensions

unit in mm

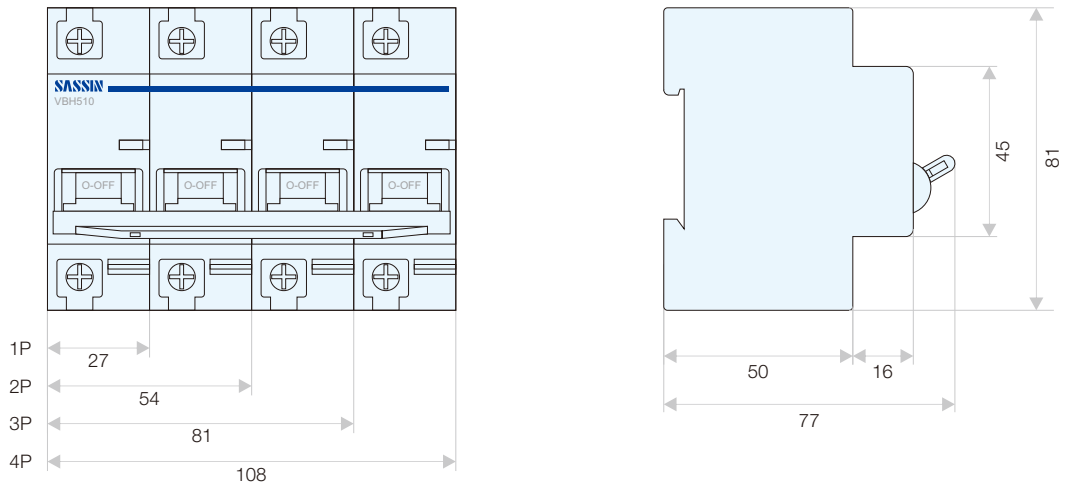

Functions

- Switching and isolation function
- Controlling
- Protection against the effects of sinusoidal alternating earth fault currents
- Protection against indirect contacts and additional protection against direct contacts.
- Protection against fire hazard caused by insulation faults
- Used in residential building , non-residential building, energy sources, industry and infrastructure.
- Anti false wiring design to ensure safe wiring



Technical specifications

- Standard: IEC 61008-1 (AC type / A type), IEC 62643 (B type)
- Type (wave form of the earth leakage sensed): AC, A, B
- Trip time type: instantaneous, selectivity S
- Number of poles (P): 2, 4
- Rated current In (A): 10, 16, 25, 40, 63, 80, 100
- Rated voltage Ue (V AC): 2P: 230; 4P: 380
- Rated insulation voltage Ui (V AC): 500
- Rated frequency Fn (Hz): 50/60
- Rated residual currents IΔn (mA): 10, 30, 100, 300
- Rated conditional short-circuit current:
  Inc = IΔc = 6000 A SCPD fuse 100 A Gg
- Making and breaking capacity for VRC5-63 Im (A): 630
- Making and breaking capacity for VRC5-100 Im (A): 1000
- Rated residual breaking capacity IΔm (A): 1000
- Degree of protection: IP20, with connected conductors
- Conductor cross-section
  - Solid and stranded (mm^2): 1-35
  - Finely stranded with end sleeve (mm^2): 1-25
- Electrical endurance (Cycles): 4,000
- Mechanical endurance (Cycles): 10,000
- Fire resistance according to IEC 60695: 960 °C
- Mounting position: Any
- Busbar connection: Pin type
- Terminal tightening torque (N·m): 2.5
- Ambient temperature (°C): -5 ~ +40, max. 95 % humidity

Features

- Electromagnetic type, voltage independent.
- The handle being sealable or equipped with padlock bracket avoids dangerous operation changes (ON / OFF)
- Adequate printing of all data on the front provides long-term identification

Selection and ordering data

AC type

Number of poles	Rated residual current IΔn (mA)	Rated current In (A)	Left neutral Type code	Right neutral Type code
General type, instantaneous				
2P 230 V AC	10	10	VRC52-AC-10-0.01-L	VRC52-AC-10-0.01
		16	VRC52-AC-16-0.01-L	VRC52-AC-16-0.01
	30	25	VRC52-AC-25-0.03-L	VRC52-AC-25-0.03
		40	VRC52-AC-40-0.03-L	VRC52-AC-40-0.03
		63	VRC52-AC-63-0.03-L	VRC52-AC-63-0.03
		80	VRC52-AC-80-0.03-L	VRC52-AC-80-0.03
		100	VRC52-AC-100-0.03-L	VRC52-AC-100-0.03
	100	25	VRC52-AC-25-0.1-L	VRC52-AC-25-0.1
		40	VRC52-AC-40-0.1-L	VRC52-AC-40-0.1
		63	VRC52-AC-63-0.1-L	VRC52-AC-63-0.1
		80	VRC52-AC-80-0.1-L	VRC52-AC-80-0.1
		100	VRC52-AC-100-0.1-L	VRC52-AC-100-0.1
	300	25	VRC52-AC-25-0.3-L	VRC52-AC-25-0.3
		40	VRC52-AC-40-0.3-L	VRC52-AC-40-0.3
		63	VRC52-AC-63-0.3-L	VRC52-AC-63-0.3
		80	VRC52-AC-80-0.3-L	VRC52-AC-80-0.3
		100	VRC52-AC-100-0.3-L	VRC52-AC-100-0.3
4P 380 V AC	10	10	VRC54-AC-10-0.01-L	VRC54-AC-10-0.01
		16	VRC54-AC-16-0.01-L	VRC54-AC-16-0.01
	30	25	VRC54-AC-25-0.03-L	VRC54-AC-25-0.03
		40	VRC54-AC-40-0.03-L	VRC54-AC-40-0.03
		63	VRC54-AC-63-0.03-L	VRC54-AC-63-0.03
		80	VRC54-AC-80-0.03-L	VRC54-AC-80-0.03
		100	VRC54-AC-100-0.03-L	VRC54-AC-100-0.03
	100	25	VRC54-AC-25-0.1-L	VRC54-AC-25-0.1
		40	VRC54-AC-40-0.1-L	VRC54-AC-40-0.1
		63	VRC54-AC-63-0.1-L	VRC54-AC-63-0.1
		80	VRC54-AC-80-0.1-L	VRC54-AC-80-0.1
		100	VRC54-AC-100-0.1-L	VRC54-AC-100-0.1
	300	25	VRC54-AC-25-0.3-L	VRC54-AC-25-0.3
		40	VRC54-AC-40-0.3-L	VRC54-AC-40-0.3
		63	VRC54-AC-63-0.3-L	VRC54-AC-63-0.3
		80	VRC54-AC-80-0.3-L	VRC54-AC-80-0.3
		100	VRC54-AC-100-0.3-L	VRC54-AC-100-0.3
S type, selective S				
2P 230 V AC	100	25	VRC52-AC-S-25-0.1-L	VRC52-AC-S-25-0.1
		40	VRC52-AC-S-40-0.1-L	VRC52-AC-S-40-0.1
		63	VRC52-AC-S-63-0.1-L	VRC52-AC-S-63-0.1
		80	VRC52-AC-S-80-0.1-L	VRC52-AC-S-80-0.1
		100	VRC52-AC-S-100-0.1-L	VRC52-AC-S-100-0.1
	300	25	VRC52-AC-S-25-0.3-L	VRC52-AC-S-25-0.3
		40	VRC52-AC-S-40-0.3-L	VRC52-AC-S-40-0.3
		63	VRC52-AC-S-63-0.3-L	VRC52-AC-S-63-0.3
		80	VRC52-AC-S-80-0.3-L	VRC52-AC-S-80-0.3
		100	VRC52-AC-S-100-0.3-L	VRC52-AC-S-100-0.3
4P 380 V AC	100	25	VRC54-AC-S-25-0.1-L	VRC54-AC-S-25-0.1
		40	VRC54-AC-S-40-0.1-L	VRC54-AC-S-40-0.1
		63	VRC54-AC-S-63-0.1-L	VRC54-AC-S-63-0.1
		80	VRC54-AC-S-80-0.1-L	VRC54-AC-S-80-0.1
		100	VRC54-AC-S-100-0.1-L	VRC54-AC-S-100-0.1
	300	25	VRC54-AC-S-25-0.3-L	VRC54-AC-S-25-0.3
		40	VRC54-AC-S-40-0.3-L	VRC54-AC-S-40-0.3
		63	VRC54-AC-S-63-0.3-L	VRC54-AC-S-63-0.3
		80	VRC54-AC-S-80-0.3-L	VRC54-AC-S-80-0.3
		100	VRC54-AC-S-100-0.3-L	VRC54-AC-S-100-0.3

Selection and ordering data

A type

Number of poles	Rated residual current IΔn (mA)	Rated current In (A)	Left neutral Type code	Right neutral Type code
General type, instantaneous				
2P 230 V AC	10	10	VRC52-A-10-0.01-L	VRC52-A-10-0.01
		16	VRC52-A-16-0.01-L	VRC52-A-16-0.01
	30	25	VRC52-A-25-0.03-L	VRC52-A-25-0.03
		40	VRC52-A-40-0.03-L	VRC52-A-40-0.03
		63	VRC52-A-63-0.03-L	VRC52-A-63-0.03
		80	VRC52-A-80-0.03-L	VRC52-A-80-0.03
		100	VRC52-A-100-0.03-L	VRC52-A-100-0.03
	100	25	VRC52-A-25-0.1-L	VRC52-A-25-0.1
		40	VRC52-A-40-0.1-L	VRC52-A-40-0.1
		63	VRC52-A-63-0.1-L	VRC52-A-63-0.1
		80	VRC52-A-80-0.1-L	VRC52-A-80-0.1
		100	VRC52-A-100-0.1-L	VRC52-A-100-0.1
	300	25	VRC52-A-25-0.3-L	VRC52-A-25-0.3
		40	VRC52-A-40-0.3-L	VRC52-A-40-0.3
		63	VRC52-A-63-0.3-L	VRC52-A-63-0.3
		80	VRC52-A-80-0.3-L	VRC52-A-80-0.3
		100	VRC52-A-100-0.3-L	VRC52-A-100-0.3
4P 380 V AC	10	10	VRC54-A-10-0.01-L	VRC54-A-10-0.01
		16	VRC54-A-16-0.01-L	VRC54-A-16-0.01
	30	25	VRC54-A-25-0.03-L	VRC54-A-25-0.03
		40	VRC54-A-40-0.03-L	VRC54-A-40-0.03
		63	VRC54-A-63-0.03-L	VRC54-A-63-0.03
		80	VRC54-A-80-0.03-L	VRC54-A-80-0.03
		100	VRC54-A-100-0.03-L	VRC54-A-100-0.03
	100	25	VRC54-A-25-0.1-L	VRC54-A-25-0.1
		40	VRC54-A-40-0.1-L	VRC54-A-40-0.1
		63	VRC54-A-63-0.1-L	VRC54-A-63-0.1
		80	VRC54-A-80-0.1-L	VRC54-A-80-0.1
		100	VRC54-A-100-0.1-L	VRC54-A-100-0.1
	300	25	VRC54-A-25-0.3-L	VRC54-A-25-0.3
		40	VRC54-A-40-0.3-L	VRC54-A-40-0.3
		63	VRC54-A-63-0.3-L	VRC54-A-63-0.3
		80	VRC54-A-80-0.3-L	VRC54-A-80-0.3
		100	VRC54-A-100-0.3-L	VRC54-A-100-0.3
AD type, anti-disturbance				
2P 230 V AC	30	25	VRC512AD-A-25-0.03-L	VRC512AD-A-25-0.03
		40	VRC512AD-A-40-0.03-L	VRC512AD-A-40-0.03
		63	VRC512AD-A-63-0.03-L	VRC512AD-A-63-0.03
		80	VRC512AD-A-80-0.03-L	VRC512AD-A-80-0.03
		100	VRC512AD-A-100-0.03-L	VRC512AD-A-100-0.03
4P 380 V AC	30	25	VRC514AD-A-25-0.03-L	VRC514AD-A-25-0.03
		40	VRC514AD-A-40-0.03-L	VRC514AD-A-40-0.03
		63	VRC514AD-A-63-0.03-L	VRC514AD-A-63-0.03
		80	VRC514AD-A-80-0.03-L	VRC514AD-A-80-0.03
		100	VRC514AD-A-100-0.03-L	VRC514AD-A-100-0.03

Selection and ordering data

A type

	Number of poles	Rated residual current IΔn (mA)	Rated current In (A)	Left neutral Type code	Right neutral Type code
S type, selective [S]					
	2P 230 V AC	100	25	VRC52-A-S-25-0.1-L	VRC52-A-S-25-0.1
			40	VRC52-A-S-40-0.1-L	VRC52-A-S-40-0.1
			63	VRC52-A-S-63-0.1-L	VRC52-A-S-63-0.1
			80	VRC52-A-S-80-0.1-L	VRC52-A-S-80-0.1
			100	VRC52-A-S-100-0.1-L	VRC52-A-S-100-0.1
		300	25	VRC52-A-S-25-0.3-L	VRC52-A-S-25-0.3
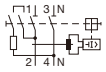			40	VRC52-A-S-40-0.3-L	VRC52-A-S-40-0.3
			63	VRC52-A-S-63-0.3-L	VRC52-A-S-63-0.3
			80	VRC52-A-S-80-0.3-L	VRC52-A-S-80-0.3
			100	VRC52-A-S-100-0.3-L	VRC52-A-S-100-0.3
	4P 380 V AC	100	25	VRC54-A-S-25-0.1-L	VRC54-A-S-25-0.1
			40	VRC54-A-S-40-0.1-L	VRC54-A-S-40-0.1
			63	VRC54-A-S-63-0.1-L	VRC54-A-S-63-0.1
			80	VRC54-A-S-80-0.1-L	VRC54-A-S-80-0.1
			100	VRC54-A-S-100-0.1-L	VRC54-A-S-100-0.1
		300	25	VRC54-A-S-25-0.3-L	VRC54-A-S-25-0.3
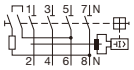			40	VRC54-A-S-40-0.3-L	VRC54-A-S-40-0.3
			63	VRC54-A-S-63-0.3-L	VRC54-A-S-63-0.3
			80	VRC54-A-S-80-0.3-L	VRC54-A-S-80-0.3
			100	VRC54-A-S-100-0.3-L	VRC54-A-S-100-0.3

B type

	Number of poles	Rated residual current IΔn (mA)	Rated current In (A)	Left neutral Type code	Right neutral Type code
General type, instantaneous					
	2P 230 V AC	30	16	VRC512B-16-0.01-L	VRC512B-16-0.01
			25	VRC512B-25-0.03-L	VRC512B-25-0.03
			40	VRC512B-40-0.03-L	VRC512B-40-0.03
			63	VRC512B-63-0.03-L	VRC512B-63-0.03
			80	VRC512B-80-0.03-L	VRC512B-80-0.03
			100	VRC512B-0.1-0.03-L	VRC512B-0.1-0.03
		100	16	VRC512B-16-0.1-L	VRC512B-16-0.1
			25	VRC512B-25-0.1-L	VRC512B-25-0.1
			40	VRC512B-40-0.1-L	VRC512B-40-0.1
			63	VRC512B-63-0.1-L	VRC512B-63-0.1
			80	VRC512B-80-0.1-L	VRC512B-80-0.1
			100	VRC512B-0.1-0.1-L	VRC512B-0.1-0.1
		300	16	VRC512B-16-0.3-L	VRC512B-16-0.3
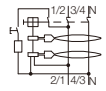			25	VRC512B-25-0.3-L	VRC512B-25-0.3
			40	VRC512B-40-0.3-L	VRC512B-40-0.3
			63	VRC512B-63-0.3-L	VRC512B-63-0.3
			80	VRC512B-80-0.3-L	VRC512B-80-0.3
			100	VRC512B-0.1-0.3-L	VRC512B-0.1-0.3
	4P 380 V AC	30	25	VRC514B-25-0.03-L	VRC514B-25-0.03
			40	VRC514B-40-0.03-L	VRC514B-40-0.03
			63	VRC514B-63-0.03-L	VRC514B-63-0.03
			80	VRC514B-80-0.03-L	VRC514B-80-0.03
			100	VRC514B-0.1-0.03-L	VRC514B-0.1-0.03
		100	25	VRC514B-25-0.1-L	VRC514B-25-0.1
			40	VRC514B-40-0.1-L	VRC514B-40-0.1
			63	VRC514B-63-0.1-L	VRC514B-63-0.1
			80	VRC514B-80-0.1-L	VRC514B-80-0.1
			100	VRC514B-0.1-0.1-L	VRC514B-0.1-0.1
		300	25	VRC514B-25-0.3-L	VRC514B-25-0.3
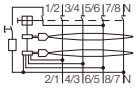			40	VRC514B-40-0.3-L	VRC514B-40-0.3
			63	VRC514B-63-0.3-L	VRC514B-63-0.3
			80	VRC514B-80-0.3-L	VRC514B-80-0.3
			100	VRC514B-0.1-0.3-L	VRC514B-0.1-0.3

Types

Both RCCBs and RCBOs are further divided into types depending on the operating function:

Type AC
For which tripping is ensured for residual sinusoidal alternating currents, whether suddenly applied or slowly rising.

Type A
For which tripping is ensured for residual sinusoidal alternating currents and residual pulsating direct currents, whether suddenly applied or slowly rising.

Type B
Type B RCDs are not only sensitive to alternating and pulsating earth fault currents with DC components at a frequency of 50/60 Hz (type A), but they are also sensitive to:

- Alternating currents up to a frequency of 1000 Hz;
- Alternating and/or pulsating currents with DC components overlapping with a direct current;
- Earth fault currents generated by a rectifier with two or more phases;
- Direct earth fault currents without residual ripple

...independently of the polarity or whether the earth fault current appears suddenly or increases gradually.

According to their trip time, RCDs can be classed as two types:

General type
Instantaneous trip without time-delay, used for general purpose.

Selective type S
Type S, trip with time-delay, used for selectivity and limit the power out only to part of the system affected by a current leakage fault.

AD range (high immunity)
Leakage currents due to actual faults and temporary residual currents caused by disturbances on the mains cannot be distinguished. The reaction to both is the same, it means the RCDs normally present in the system are tripped to break the circuit, even in the event of disturbance occurs, but not a true earth fault.
Disturbances of this kind are most often caused by:

- Operation over-voltages caused by inserting or removing loads (opening or closing protection of control devices, starting and stopping motors, switching fluorescent lighting systems on and off, etc.)
- Over-voltages of atmospheric origin, caused by direct or indirect discharges on the electrical line.

Under these circumstances, such RCD tripping is unwanted, it is neither necessary nor desirable to disconnect the load from the supply. On the contrary, the sudden and unjustified interruption of the power supply may result in very serious problems.
In order to avoid this disturbance, the use of AD range high immunity (anti-disturbance) RCDs is recommended. This device was designed to trip with a slight time delay, but this does not compromise the safety limits set by the standards in force.

For this range of devices, the limit values for the break times are defined. In accordance with the general type, the AD range high immunity RCDs are instantaneous versions.

Tripping sensitivity data

- RCD with a rated residual current of maximum 30 mA are used for personnel, material and fire protection, as well as for protection against direct contact.
- RCD with a rated residual current of maximum 300 mA are used as preventative fire protection in case of insulation faults.
- RCD with a rated residual current of 100 mA co-ordinated with the earth system according to the formula IΔn < 50/R, to provide protection against indirect contacts.

Outline and installation dimensions

unit in mm

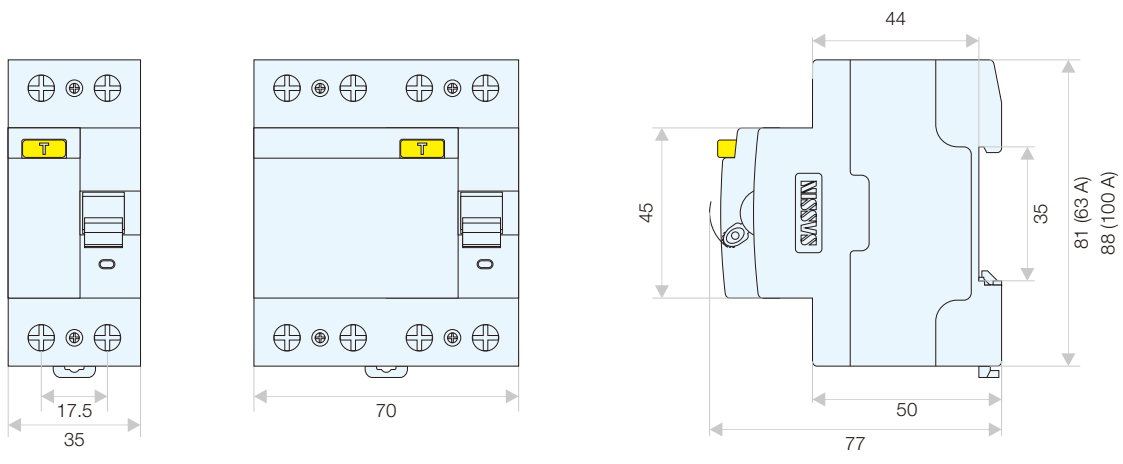

Compact RCBOs
Series VRBNC515E

Functions

The VRBNC515E electronic RCBO is designed to fullfill the requirements of circuit protection by providing the technology residual current protection combined with over-current circuit protection in a compact design.

- Equipment control and protection against short-circuits and overloads
- Isolation of electrical circuits
- Protecting people from direct and indirect contact
- Protecting installations from insulation faults to prevent electrically ignited fires



Technical specifications

- Standards: IEC 61009-1
- Number of poles: 1P+N
- Neutral can be switched off: yes

Electrical features

- Residual current-detection principle: Electronic (voltage dependent)
- Rated operational voltage Ue (V AC): 230
- Rated current In (A): 6, 10, 16, 20, 25, 32, 40
- Rated residual operating current IΔn (mA): 10, 30, 100
- Type (wave form of residual current): AC, A
- Rated insulation voltage Ui (V): 500
- Rated impulse withstand voltage Uimp (kV): 4
- Rated ultimated breaking capacity (kA): 6
- Rated service breaking capacity (kA): 6
- Instantaneous tripping characteristic: B, C
- Thermal-magnetic release characteristic:
  - B: 3 In ≤ In ≤ 5 In;
  - C: 5 In ≤ In ≤ 10 In

Mechanical features

- Endurance
  - Electrical life (times): 10000
  - Mechanical life (times): 20000
- Protection degree: Housing IP40; terminals IP20
- Pollution degree: 3
- Ambient temperature (°C): -25 ... +45
- Storage temperature (°C): -40 ... +70
- Environmental conditions (°C/RH): 28 cycles with +20 °C/95% and +40 °C/50%

Installation and connection

- Overvoltage category: III
- Connection capacity (mm^2): 1 ... 10
- Supply from: Top terminals
- Terminal tightening torque (N·m): 2.5
- Altitude (meters): Max. 2000

Applications

- Ideal for installations that require the added benefit of RCBOs with switched neutral line.
- The compact design makes it suited for new builds as well as the retrofit market, to enhance the protection level in electrical circuits by additional personal safety.
- In new buildings, the 50 % space saving compared to the 2 modular width version allows implementation of more compact and cheaper distribution boards.
- Especially in projects where many circuits have to be equipped with individual residual current protection, smaller distribution boards can be installed, which saves significant costs.
- In old buildings, it is very easy to replace the existing 1-pole MCBs with a compact RCBO in only 1 modular width, this means no additional space is required in the distribution board.

Features

- Thanks to the built in switched neutral line on the left, a faulty or damaged circuit can be fully isolate by disconnecting live and neutral conductors, and testing of outgoing circuits is easier as an electrician does not have to disconnect terminals before testing.
- Compact size only 18 mm in width saves 50 % space compared to the version 2 modular width RCBOs.
- Rated current is up to 40 A with high breaking capacity 6 kA.
- Real contact position indicator for easier identification, independently on the toggle position.
- Cage terminals with fail safe feature to avoid improper installation.
- Additional components are available, such as: auxiliary contact, fault signal contact, under-voltage release and shunt release.

Selection and ordering data

	Number of poles	Rated residual current IΔn (mA)	Rated current In (A)	Characteristic B	Characteristic C
				Type code	Type code
AC Type	1P+N 230 V AC	10	6	VRBNC515E-B6-AC-0.01	VRBNC515E-C6-AC-0.01
			10	VRBNC515E-B10-AC-0.01	VRBNC515E-C10-AC-0.01
			16	VRBNC515E-B16-AC-0.01	VRBNC515E-C16-AC-0.01
			20	VRBNC515E-B20-AC-0.01	VRBNC515E-C20-AC-0.01
			25	VRBNC515E-B25-AC-0.01	VRBNC515E-C25-AC-0.01
			32	VRBNC515E-B32-AC-0.01	VRBNC515E-C32-AC-0.01
			40	VRBNC515E-B40-AC-0.01	VRBNC515E-C40-AC-0.01
		30	6	VRBNC515E-B6-AC-0.03	VRBNC515E-C6-AC-0.03
			10	VRBNC515E-B10-AC-0.03	VRBNC515E-C10-AC-0.03
			16	VRBNC515E-B16-AC-0.03	VRBNC515E-C16-AC-0.03
			20	VRBNC515E-B20-AC-0.03	VRBNC515E-C20-AC-0.03
			25	VRBNC515E-B25-AC-0.03	VRBNC515E-C25-AC-0.03
			32	VRBNC515E-B32-AC-0.03	VRBNC515E-C32-AC-0.03
			40	VRBNC515E-B40-AC-0.03	VRBNC515E-C40-AC-0.03
		100	6	VRBNC515E-B6-AC-0.1	VRBNC515E-C6-AC-0.1
			10	VRBNC515E-B10-AC-0.1	VRBNC515E-C10-AC-0.1
			16	VRBNC515E-B16-AC-0.1	VRBNC515E-C16-AC-0.1
			20	VRBNC515E-B20-AC-0.1	VRBNC515E-C20-AC-0.1
			25	VRBNC515E-B25-AC-0.1	VRBNC515E-C25-AC-0.1
			32	VRBNC515E-B32-AC-0.1	VRBNC515E-C32-AC-0.1
			40	VRBNC515E-B40-AC-0.1	VRBNC515E-C40-AC-0.1
A Type	1P+N 230 V AC	10	6	VRBNC515E-B6-A-0.01	VRBNC515E-C6-A-0.01
			10	VRBNC515E-B10-A-0.01	VRBNC515E-C10-A-0.01
			16	VRBNC515E-B16-A-0.01	VRBNC515E-C16-A-0.01
			20	VRBNC515E-B20-A-0.01	VRBNC515E-C20-A-0.01
			25	VRBNC515E-B25-A-0.01	VRBNC515E-C25-A-0.01
			32	VRBNC515E-B32-A-0.01	VRBNC515E-C32-A-0.01
			40	VRBNC515E-B40-A-0.01	VRBNC515E-C40-A-0.01
		30	6	VRBNC515E-B6-A-0.03	VRBNC515E-C6-A-0.03
			10	VRBNC515E-B10-A-0.03	VRBNC515E-C10-A-0.03
			16	VRBNC515E-B16-A-0.03	VRBNC515E-C16-A-0.03
			20	VRBNC515E-B20-A-0.03	VRBNC515E-C20-A-0.03
			25	VRBNC515E-B25-A-0.03	VRBNC515E-C25-A-0.03
			32	VRBNC515E-B32-A-0.03	VRBNC515E-C32-A-0.03
			40	VRBNC515E-B40-A-0.03	VRBNC515E-C40-A-0.03
		100	6	VRBNC515E-B6-A-0.1	VRBNC515E-C6-A-0.1
			10	VRBNC515E-B10-A-0.1	VRBNC515E-C10-A-0.1
			16	VRBNC515E-B16-A-0.1	VRBNC515E-C16-A-0.1
			20	VRBNC515E-B20-A-0.1	VRBNC515E-C20-A-0.1
			25	VRBNC515E-B25-A-0.1	VRBNC515E-C25-A-0.1
			32	VRBNC515E-B32-A-0.1	VRBNC515E-C32-A-0.1
			40	VRBNC515E-B40-A-0.1	VRBNC515E-C40-A-0.1

Outline and installation dimensions

unit in mm

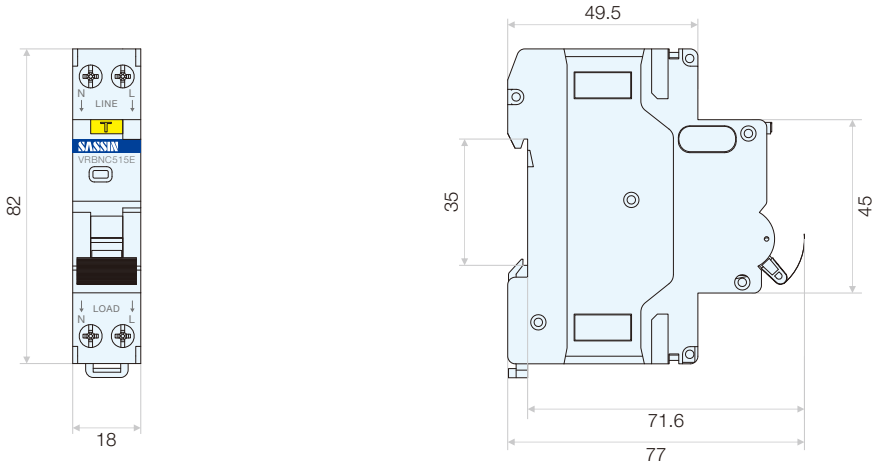

Residual Current Circuit Breakers with Overcurrent Protection
Series VRBNE515

Functions

- Switching and isolation function.
- Protection against overload and short-circuit currents.
- Protection against the effects of sinusoidal alternating earth fault currents
- Protection against indirect contacts and and additional protection against direct contacts.
- Protection against fire hazard caused by insulation faults.
- Used in residential building and distribution boards.



Technical specifications

- Standard: IEC 61009-1
- Type (wave form of the earth leakage sensed): AC, A
- Number of pole: 1+N (1 module)
- Rated current In (A): 6, 10, 16, 20, 25, 32, 40, 50
- Rated voltage Ue (V AC): 230
- Rated insulation voltage Ui (V AC): 500
- Rated frequency Fn (Hz): 50/60
- Rated residual currents IΔn (mA): 30
- Rated breaking capacity acc. to IEC 61009-1 ultimate Icn (kA): 6
- Rated residual breaking capacity IΔm (kA): 3
- Rated impulse withstand voltage (1.2/50) Uimp (kV): 4
- Dielectric test voltage at ind. freq. for 1 min. (kV): 2
- Surge current resistance (wave 8/20) (A): 3000
- Tripping characteristic: B, C
- Characteristic B (In): 3-5
- Characteristic C (In): 5-10
- Electrical life (times): 4,000
- Mechanical life (times): 10,000
- Degree of protection: IP20, with connected conductors
- Mounting position: Any
- Conductor cross-sections
- Solid and stranded (mm^2): 0.75-35
- Finely stranded with end sleeve (mm^2): 0.75-25
- Terminals
- Terminal tightening torque (N·m): 2.5
- Ambient temperature (°C): -25 ~ +45, max. 95 % humidity
- Storage temperature (°C): -40 ~ +75
- Altitude (meters): Max. 2000

Features

- The combination of an RCCB and a miniature circuit breaker is achieved in a compact design.
- The MCB part protects lines against overload and short circuits and is available in characteristics Characteristic B and C.
- Electronic Type, voltage dependent
- The earth reference cable ensures protection against earth leakage in case of any loss of supply neutral.

Selection and ordering data

	Number of poles	Rated residual current IΔn (mA)	Rated current In (A)	Characteristic B	Characteristic C
				Type code	Type code
AC Type	1P+N 230 V AC	30	6	VRBNE515-B6-AC-0.03	VRBNE515-C6-AC-0.03
			10	VRBNE515-B10-AC-0.03	VRBNE515-C10-AC-0.03
			16	VRBNE515-B16-AC-0.03	VRBNE515-C16-AC-0.03
			20	VRBNE515-B20-AC-0.03	VRBNE515-C20-AC-0.03
			25	VRBNE515-B25-AC-0.03	VRBNE515-C25-AC-0.03
			32	VRBNE515-B32-AC-0.03	VRBNE515-C32-AC-0.03
			40	VRBNE515-B40-AC-0.03	VRBNE515-C40-AC-0.03
			50	VRBNE515-B50-AC-0.03	VRBNE515-C50-AC-0.03
A Type	1P+N 230 V AC	30	6	VRBNE515-B6-A-0.03	VRBNE515-C6-A-0.03
			10	VRBNE515-B10-A-0.03	VRBNE515-C10-A-0.03
			16	VRBNE515-B16-A-0.03	VRBNE515-C16-A-0.03
			20	VRBNE515-B20-A-0.03	VRBNE515-C20-A-0.03
			25	VRBNE515-B25-A-0.03	VRBNE515-C25-A-0.03
			32	VRBNE515-B32-A-0.03	VRBNE515-C32-A-0.03
			40	VRBNE515-B40-A-0.03	VRBNE515-C40-A-0.03
			50	VRBNE515-B50-A-0.03	VRBNE515-C50-A-0.03

Tripping characteristic curves

Characteristic B

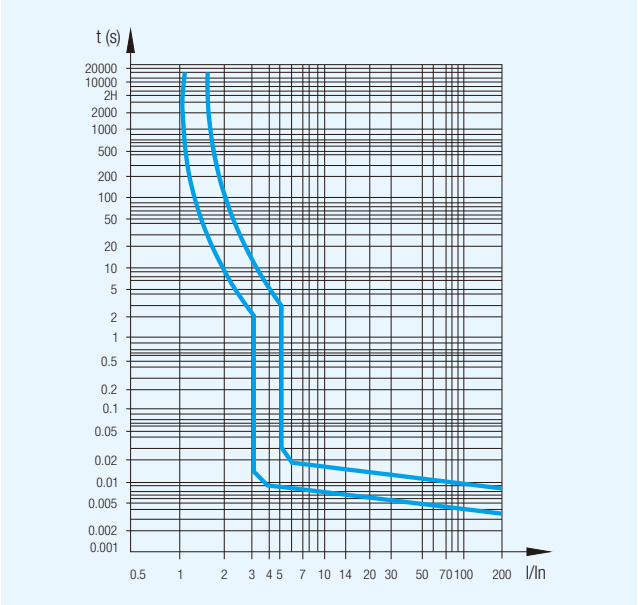

Characteristic C

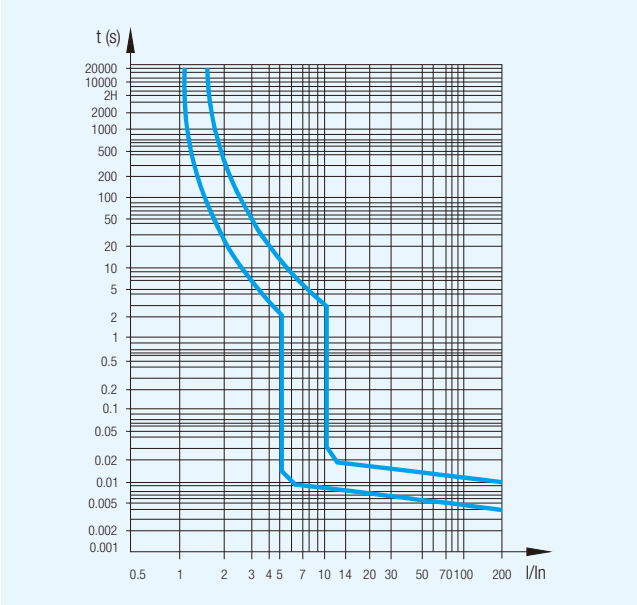

Types

Both RCCBs and RCBOs are further divided into types depending on the operating function:

- Type AC ⏦: For which tripping is ensured for residual sinusoidal alternating currents, whether suddenly applied or slowly rising.
- Type A ⏦: For which tripping is ensured for residual sinusoidal alternating currents and residual pulsating direct currents, whether suddenly applied or slowly rising.

Tripping sensitivity data

- RCDs with a rated residual current of maximum 30 mA are used for personnel, material and fire protection, as well as for protection against direct contact.

Outline and installation dimensions

unit in mm

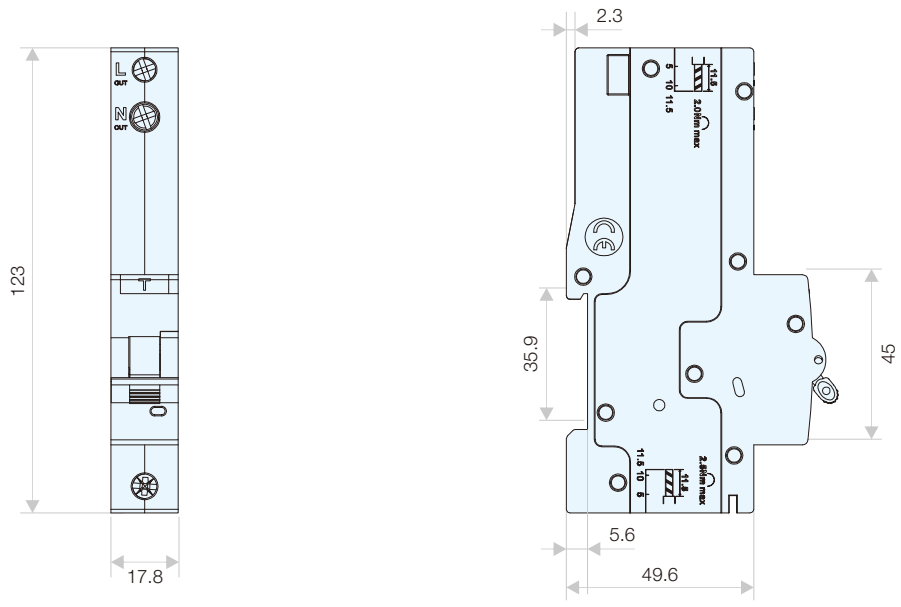

Residual Current Circuit Breakers with Overcurrent Protection
Series VRB510E

The VRB510E electronic RCBO is designed to fullfill the requirements of circuit protection by providing the technology residual current protection combined with over-current circuit protection.

- Equipment control and protection against short-circuits and overloads
- Isolation of electrical circuits
- Protecting people from direct and indirect contact
- Protecting installations from insulation faults to prevent electrically ignited fires



Features

- Rated current up to 80 A.
- Breaking capacity 6 kA and 10 kA.
- Overload protection is available for both live line and neutral line
- Adjustable rated residual current make it suitable for different protection requirements
- Real contact position indicator for easier indentification, independently on the toggle position
- Cage terminals with fail safe feature to avoid improper installation.
- Additional components are available, such as: auxiliary contact, fault signal contact, under-voltage release and shunt release.

Technical specifications

			VRB515E		VRB516E	
Standards			IEC 61009-1			
Number of poles			1P+N		3P+N	
Neutral can be switched off			Yes		Yes	
Electrical features						
Residual current-detection principle			Electronic (voltage dependent)			
Rated operational voltage Ue		V AC	230		400	
Rated current In		A	6, 10, 16, 20, 25, 32, 40, 50, 63, 80			
Rated residual operating current IΔn		mA	30, 100, 300			
Adjustable rated residual current			-		yes	
Type (wave form of residual current)			AC, A			
Rated insulation voltage Ui		V	500			
Rated impulse withstand voltage Uimp		kV	4			
Rated ultimated breaking capacity		kA	6	10	6	10
Rated service breaking capacity		kA	6	7.5	6	7.5
Instantaneous tripping characteristic			B, C, D			
Thermal-magnetic release characteristic			B: 3 In ≤ In ≤ 5 In C: 5 In ≤ In ≤ 10 In D: 10 In ≤ In ≤ 20 In			
Mechanical features						
Endurance	Electrical	cycles	10000			
	Mechanical	cycles	20000			
Protection degree	Housing		IP40			
	Terminals		IP20			
Pollution degree			3			
Ambient temperature		°C	-25 ... +45			
Storage temperature		°C	-40 ... +70			
Environmental conditions		°C/RH	28 cycles with +20 °C/95% and +40 °C/50%			
Altitude		Meter	≤ 2000			
Installation and connection						
Overvoltage category			III			
Connection capacity		mm^2	1 ... 35			
Supply from			Top terminals			
Tightening torque		N·m	2.5			
Dimensions (W × H × D)		mm	36 × 82 × 72.6		72 × 99 × 72.6	
Weight		g	210.5		462.5	

Selection and ordering data

Icn = 6 kA
Characteristic B
General type, instantaneous

	Number of poles	Rated residual current IΔn (mA)	Rated current In (A)	Type AC	Type A
				Type code	Type code
	1P+N 230 V AC	30	6	VRB515E-B6-AC-0.03-N	VRB515E-B6-A-0.03-N
			10	VRB515E-B10-AC-0.03-N	VRB515E-B10-A-0.03-N
			16	VRB515E-B16-AC-0.03-N	VRB515E-B16-A-0.03-N
			20	VRB515E-B20-AC-0.03-N	VRB515E-B20-A-0.03-N
			25	VRB515E-B25-AC-0.03-N	VRB515E-B25-A-0.03-N
			32	VRB515E-B32-AC-0.03-N	VRB515E-B32-A-0.03-N
			40	VRB515E-B40-AC-0.03-N	VRB515E-B40-A-0.03-N
			50	VRB515E-B50-AC-0.03-N	VRB515E-B50-A-0.03-N
			63	VRB515E-B63-AC-0.03-N	VRB515E-B63-A-0.03-N
			80	VRB515E-B80-AC-0.03-N	VRB515E-B80-A-0.03-N
		100	6	VRB515E-B6-AC-0.1-N	VRB515E-B6-A-0.1-N
			10	VRB515E-B10-AC-0.1-N	VRB515E-B10-A-0.1-N
			16	VRB515E-B16-AC-0.1-N	VRB515E-B16-A-0.1-N
			20	VRB515E-B20-AC-0.1-N	VRB515E-B20-A-0.1-N
			25	VRB515E-B25-AC-0.1-N	VRB515E-B25-A-0.1-N
			32	VRB515E-B32-AC-0.1-N	VRB515E-B32-A-0.1-N
			40	VRB515E-B40-AC-0.1-N	VRB515E-B40-A-0.1-N
			50	VRB515E-B50-AC-0.1-N	VRB515E-B50-A-0.1-N
			63	VRB515E-B63-AC-0.1-N	VRB515E-B63-A-0.1-N
			80	VRB515E-B80-AC-0.1-N	VRB515E-B80-A-0.1-N
		300	6	VRB515E-B6-AC-0.3-N	VRB515E-B6-A-0.3-N
			10	VRB515E-B10-AC-0.3-N	VRB515E-B10-A-0.3-N
			16	VRB515E-B16-AC-0.3-N	VRB515E-B16-A-0.3-N
			20	VRB515E-B20-AC-0.3-N	VRB515E-B20-A-0.3-N
			25	VRB515E-B25-AC-0.3-N	VRB515E-B25-A-0.3-N
			32	VRB515E-B32-AC-0.3-N	VRB515E-B32-A-0.3-N
			40	VRB515E-B40-AC-0.3-N	VRB515E-B40-A-0.3-N
			50	VRB515E-B50-AC-0.3-N	VRB515E-B50-A-0.3-N
			63	VRB515E-B63-AC-0.3-N	VRB515E-B63-A-0.3-N
			80	VRB515E-B80-AC-0.3-N	VRB515E-B80-A-0.3-N
	3P+N 400 V AC	30	6	VRB516E-B6-AC-0.03-N	VRB516E-B6-A-0.03-N
			10	VRB516E-B10-AC-0.03-N	VRB516E-B10-A-0.03-N
			16	VRB516E-B16-AC-0.03-N	VRB516E-B16-A-0.03-N
			20	VRB516E-B20-AC-0.03-N	VRB516E-B20-A-0.03-N
			25	VRB516E-B25-AC-0.03-N	VRB516E-B25-A-0.03-N
			32	VRB516E-B32-AC-0.03-N	VRB516E-B32-A-0.03-N
			40	VRB516E-B40-AC-0.03-N	VRB516E-B40-A-0.03-N
			50	VRB516E-B50-AC-0.03-N	VRB516E-B50-A-0.03-N
			63	VRB516E-B63-AC-0.03-N	VRB516E-B63-A-0.03-N
			80	VRB516E-B80-AC-0.03-N	VRB516E-B80-A-0.03-N
		100	6	VRB516E-B6-AC-0.1-N	VRB516E-B6-A-0.1-N
			10	VRB516E-B10-AC-0.1-N	VRB516E-B10-A-0.1-N
			16	VRB516E-B16-AC-0.1-N	VRB516E-B16-A-0.1-N
			20	VRB516E-B20-AC-0.1-N	VRB516E-B20-A-0.1-N
			25	VRB516E-B25-AC-0.1-N	VRB516E-B25-A-0.1-N
			32	VRB516E-B32-AC-0.1-N	VRB516E-B32-A-0.1-N
			40	VRB516E-B40-AC-0.1-N	VRB516E-B40-A-0.1-N
			50	VRB516E-B50-AC-0.1-N	VRB516E-B50-A-0.1-N
			63	VRB516E-B63-AC-0.1-N	VRB516E-B63-A-0.1-N
			80	VRB516E-B80-AC-0.1-N	VRB516E-B80-A-0.1-N
		300	6	VRB516E-B6-AC-0.3-N	VRB516E-B6-A-0.3-N
			10	VRB516E-B10-AC-0.3-N	VRB516E-B10-A-0.3-N
			16	VRB516E-B16-AC-0.3-N	VRB516E-B16-A-0.3-N
			20	VRB516E-B20-AC-0.3-N	VRB516E-B20-A-0.3-N
			25	VRB516E-B25-AC-0.3-N	VRB516E-B25-A-0.3-N
			32	VRB516E-B32-AC-0.3-N	VRB516E-B32-A-0.3-N
			40	VRB516E-B40-AC-0.3-N	VRB516E-B40-A-0.3-N
			50	VRB516E-B50-AC-0.3-N	VRB516E-B50-A-0.3-N
			63	VRB516E-B63-AC-0.3-N	VRB516E-B63-A-0.3-N
			80	VRB516E-B80-AC-0.3-N	VRB516E-B80-A-0.3-N
		50-100-300	6	VRB516E-B6-AC-0.05-0.1-0.3-N	VRB516E-B6-A-0.05-0.1-0.3-N
			10	VRB516E-B10-AC-0.05-0.1-0.3-N	VRB516E-B10-A-0.05-0.1-0.3-N
			16	VRB516E-B16-AC-0.05-0.1-0.3-N	VRB516E-B16-A-0.05-0.1-0.3-N
			20	VRB516E-B20-AC-0.05-0.1-0.3-N	VRB516E-B20-A-0.05-0.1-0.3-N
			25	VRB516E-B25-AC-0.05-0.1-0.3-N	VRB516E-B25-A-0.05-0.1-0.3-N
			32	VRB516E-B32-AC-0.05-0.1-0.3-N	VRB516E-B32-A-0.05-0.1-0.3-N
			40	VRB516E-B40-AC-0.05-0.1-0.3-N	VRB516E-B40-A-0.05-0.1-0.3-N
			50	VRB516E-B50-AC-0.05-0.1-0.3-N	VRB516E-B50-A-0.05-0.1-0.3-N
			63	VRB516E-B63-AC-0.05-0.1-0.3-N	VRB516E-B63-A-0.05-0.1-0.3-N
			80	VRB516E-B80-AC-0.05-0.1-0.3-N	VRB516E-B80-A-0.05-0.1-0.3-N

Residual Current Circuit Breakers with Overcurrent Protection
Series VRB510E

Selection and ordering data

Icn = 6 kA
Characteristic B
S type, selective

	Number of poles	Rated residual current IΔn (mA)	Rated current In (A)	Type AC Type code	Type A Type code
	1P+N 230 V AC	100	6	VRB515E-B6-AC-0.1-S-N	VRB515E-B6-A-0.1-S-N
			10	VRB515E-B10-AC-0.1-S-N	VRB515E-B10-A-0.1-S-N
			16	VRB515E-B16-AC-0.1-S-N	VRB515E-B16-A-0.1-S-N
			20	VRB515E-B20-AC-0.1-S-N	VRB515E-B20-A-0.1-S-N
			25	VRB515E-B25-AC-0.1-S-N	VRB515E-B25-A-0.1-S-N
			32	VRB515E-B32-AC-0.1-S-N	VRB515E-B32-A-0.1-S-N
			40	VRB515E-B40-AC-0.1-S-N	VRB515E-B40-A-0.1-S-N
			50	VRB515E-B50-AC-0.1-S-N	VRB515E-B50-A-0.1-S-N
			63	VRB515E-B63-AC-0.1-S-N	VRB515E-B63-A-0.1-S-N
			80	VRB515E-B80-AC-0.1-S-N	VRB515E-B80-A-0.1-S-N
		300	6	VRB515E-B6-AC-0.3-S-N	VRB515E-B6-A-0.3-S-N
			10	VRB515E-B10-AC-0.3-S-N	VRB515E-B10-A-0.3-S-N
			16	VRB515E-B16-AC-0.3-S-N	VRB515E-B16-A-0.3-S-N
			20	VRB515E-B20-AC-0.3-S-N	VRB515E-B20-A-0.3-S-N
			25	VRB515E-B25-AC-0.3-S-N	VRB515E-B25-A-0.3-S-N
			32	VRB515E-B32-AC-0.3-S-N	VRB515E-B32-A-0.3-S-N
			40	VRB515E-B40-AC-0.3-S-N	VRB515E-B40-A-0.3-S-N
			50	VRB515E-B50-AC-0.3-S-N	VRB515E-B50-A-0.3-S-N
			63	VRB515E-B63-AC-0.3-S-N	VRB515E-B63-A-0.3-S-N
			80	VRB515E-B80-AC-0.3-S-N	VRB515E-B80-A-0.3-S-N
	3P+N 400 V AC	100	6	VRB516E-B6-AC-0.1-S-N	VRB516E-B6-A-0.1-S-N
			10	VRB516E-B10-AC-0.1-S-N	VRB516E-B10-A-0.1-S-N
			16	VRB516E-B16-AC-0.1-S-N	VRB516E-B16-A-0.1-S-N
			20	VRB516E-B20-AC-0.1-S-N	VRB516E-B20-A-0.1-S-N
			25	VRB516E-B25-AC-0.1-S-N	VRB516E-B25-A-0.1-S-N
			32	VRB516E-B32-AC-0.1-S-N	VRB516E-B32-A-0.1-S-N
			40	VRB516E-B40-AC-0.1-S-N	VRB516E-B40-A-0.1-S-N
			50	VRB516E-B50-AC-0.1-S-N	VRB516E-B50-A-0.1-S-N
			63	VRB516E-B63-AC-0.1-S-N	VRB516E-B63-A-0.1-S-N
			80	VRB516E-B80-AC-0.1-S-N	VRB516E-B80-A-0.1-S-N
		300	6	VRB516E-B6-AC-0.3-S-N	VRB516E-B6-A-0.3-S-N
			10	VRB516E-B10-AC-0.3-S-N	VRB516E-B10-A-0.3-S-N
			16	VRB516E-B16-AC-0.3-S-N	VRB516E-B16-A-0.3-S-N
			20	VRB516E-B20-AC-0.3-S-N	VRB516E-B20-A-0.3-S-N
			25	VRB516E-B25-AC-0.3-S-N	VRB516E-B25-A-0.3-S-N
			32	VRB516E-B32-AC-0.3-S-N	VRB516E-B32-A-0.3-S-N
			40	VRB516E-B40-AC-0.3-S-N	VRB516E-B40-A-0.3-S-N
			50	VRB516E-B50-AC-0.3-S-N	VRB516E-B50-A-0.3-S-N
			63	VRB516E-B63-AC-0.3-S-N	VRB516E-B63-A-0.3-S-N
			80	VRB516E-B80-AC-0.3-S-N	VRB516E-B80-A-0.3-S-N
		50-100-300	6	VRB516E-B6-AC-0.01-0.03-S-N	VRB516E-B6-A-0.01-0.03-S-N
			10	VRB516E-B10-AC-0.01-0.03-S-N	VRB516E-B10-A-0.01-0.03-S-N
			16	VRB516E-B16-AC-0.01-0.03-S-N	VRB516E-B16-A-0.01-0.03-S-N
			20	VRB516E-B20-AC-0.01-0.03-S-N	VRB516E-B20-A-0.01-0.03-S-N
			25	VRB516E-B25-AC-0.01-0.03-S-N	VRB516E-B25-A-0.01-0.03-S-N
			32	VRB516E-B32-AC-0.01-0.03-S-N	VRB516E-B32-A-0.01-0.03-S-N
			40	VRB516E-B40-AC-0.01-0.03-S-N	VRB516E-B40-A-0.01-0.03-S-N
			50	VRB516E-B50-AC-0.01-0.03-S-N	VRB516E-B50-A-0.01-0.03-S-N
			63	VRB516E-B63-AC-0.01-0.03-S-N	VRB516E-B63-A-0.01-0.03-S-N
			80	VRB516E-B80-AC-0.01-0.03-S-N	VRB516E-B80-A-0.01-0.03-S-N

Selection and ordering data

Icn = 6 kA
Characteristic C
General type, instantaneous

	Number of poles	Rated residual current IΔn (mA)	Rated current In (A)	Type AC Type code	Type A Type code
	1P+N 230 V AC	30	6	VRB515E-C6-AC-0.03-N	VRB515E-C6-A-0.03-N
			10	VRB515E-C10-AC-0.03-N	VRB515E-C10-A-0.03-N
			16	VRB515E-C16-AC-0.03-N	VRB515E-C16-A-0.03-N
			20	VRB515E-C20-AC-0.03-N	VRB515E-C20-A-0.03-N
			25	VRB515E-C25-AC-0.03-N	VRB515E-C25-A-0.03-N
			32	VRB515E-C32-AC-0.03-N	VRB515E-C32-A-0.03-N
			40	VRB515E-C40-AC-0.03-N	VRB515E-C40-A-0.03-N
			50	VRB515E-C50-AC-0.03-N	VRB515E-C50-A-0.03-N
			63	VRB515E-C63-AC-0.03-N	VRB515E-C63-A-0.03-N
			80	VRB515E-C80-AC-0.03-N	VRB515E-C80-A-0.03-N
		100	6	VRB515E-C6-AC-0.1-N	VRB515E-C6-A-0.1-N
			10	VRB515E-C10-AC-0.1-N	VRB515E-C10-A-0.1-N
			16	VRB515E-C16-AC-0.1-N	VRB515E-C16-A-0.1-N
			20	VRB515E-C20-AC-0.1-N	VRB515E-C20-A-0.1-N
			25	VRB515E-C25-AC-0.1-N	VRB515E-C25-A-0.1-N
			32	VRB515E-C32-AC-0.1-N	VRB515E-C32-A-0.1-N
			40	VRB515E-C40-AC-0.1-N	VRB515E-C40-A-0.1-N
			50	VRB515E-C50-AC-0.1-N	VRB515E-C50-A-0.1-N
			63	VRB515E-C63-AC-0.1-N	VRB515E-C63-A-0.1-N
			80	VRB515E-C80-AC-0.1-N	VRB515E-C80-A-0.1-N
		300	6	VRB515E-C6-AC-0.3-N	VRB515E-C6-A-0.3-N
			10	VRB515E-C10-AC-0.3-N	VRB515E-C10-A-0.3-N
			16	VRB515E-C16-AC-0.3-N	VRB515E-C16-A-0.3-N
			20	VRB515E-C20-AC-0.3-N	VRB515E-C20-A-0.3-N
			25	VRB515E-C25-AC-0.3-N	VRB515E-C25-A-0.3-N
			32	VRB515E-C32-AC-0.3-N	VRB515E-C32-A-0.3-N
			40	VRB515E-C40-AC-0.3-N	VRB515E-C40-A-0.3-N
			50	VRB515E-C50-AC-0.3-N	VRB515E-C50-A-0.3-N
			63	VRB515E-C63-AC-0.3-N	VRB515E-C63-A-0.3-N
			80	VRB515E-C80-AC-0.3-N	VRB515E-C80-A-0.3-N
	3P+N 400 V AC	30	6	VRB516E-C6-AC-0.03-N	VRB516E-C6-A-0.03-N
			10	VRB516E-C10-AC-0.03-N	VRB516E-C10-A-0.03-N
			16	VRB516E-C16-AC-0.03-N	VRB516E-C16-A-0.03-N
			20	VRB516E-C20-AC-0.03-N	VRB516E-C20-A-0.03-N
			25	VRB516E-C25-AC-0.03-N	VRB516E-C25-A-0.03-N
			32	VRB516E-C32-AC-0.03-N	VRB516E-C32-A-0.03-N
			40	VRB516E-C40-AC-0.03-N	VRB516E-C40-A-0.03-N
			50	VRB516E-C50-AC-0.03-N	VRB516E-C50-A-0.03-N
			63	VRB516E-C63-AC-0.03-N	VRB516E-C63-A-0.03-N
			80	VRB516E-C80-AC-0.03-N	VRB516E-C80-A-0.03-N
		100	6	VRB516E-C6-AC-0.1-N	VRB516E-C6-A-0.1-N
			10	VRB516E-C10-AC-0.1-N	VRB516E-C10-A-0.1-N
			16	VRB516E-C16-AC-0.1-N	VRB516E-C16-A-0.1-N
			20	VRB516E-C20-AC-0.1-N	VRB516E-C20-A-0.1-N
			25	VRB516E-C25-AC-0.1-N	VRB516E-C25-A-0.1-N
			32	VRB516E-C32-AC-0.1-N	VRB516E-C32-A-0.1-N
			40	VRB516E-C40-AC-0.1-N	VRB516E-C40-A-0.1-N
			50	VRB516E-C50-AC-0.1-N	VRB516E-C50-A-0.1-N
			63	VRB516E-C63-AC-0.1-N	VRB516E-C63-A-0.1-N
			80	VRB516E-C80-AC-0.1-N	VRB516E-C80-A-0.1-N
		300	6	VRB516E-C6-AC-0.3-N	VRB516E-C6-A-0.3-N
			10	VRB516E-C10-AC-0.3-N	VRB516E-C10-A-0.3-N
			16	VRB516E-C16-AC-0.3-N	VRB516E-C16-A-0.3-N
			20	VRB516E-C20-AC-0.3-N	VRB516E-C20-A-0.3-N
			25	VRB516E-C25-AC-0.3-N	VRB516E-C25-A-0.3-N
			32	VRB516E-C32-AC-0.3-N	VRB516E-C32-A-0.3-N
			40	VRB516E-C40-AC-0.3-N	VRB516E-C40-A-0.3-N
			50	VRB516E-C50-AC-0.3-N	VRB516E-C50-A-0.3-N
			63	VRB516E-C63-AC-0.3-N	VRB516E-C63-A-0.3-N
			80	VRB516E-C80-AC-0.3-N	VRB516E-C80-A-0.3-N
		50-100-300	6	VRB516E-C6-AC-0.05-0.1-0.3-N	VRB516E-C6-A-0.05-0.1-0.3-N
			10	VRB516E-C10-AC-0.05-0.1-0.3-N	VRB516E-C10-A-0.05-0.1-0.3-N
			16	VRB516E-C16-AC-0.05-0.1-0.3-N	VRB516E-C16-A-0.05-0.1-0.3-N
			20	VRB516E-C20-AC-0.05-0.1-0.3-N	VRB516E-C20-A-0.05-0.1-0.3-N
			25	VRB516E-C25-AC-0.05-0.1-0.3-N	VRB516E-C25-A-0.05-0.1-0.3-N
			32	VRB516E-C32-AC-0.05-0.1-0.3-N	VRB516E-C32-A-0.05-0.1-0.3-N
			40	VRB516E-C40-AC-0.05-0.1-0.3-N	VRB516E-C40-A-0.05-0.1-0.3-N
			50	VRB516E-C50-AC-0.05-0.1-0.3-N	VRB516E-C50-A-0.05-0.1-0.3-N
			63	VRB516E-C63-AC-0.05-0.1-0.3-N	VRB516E-C63-A-0.05-0.1-0.3-N
			80	VRB516E-C80-AC-0.05-0.1-0.3-N	VRB516E-C80-A-0.05-0.1-0.3-N

Series VRB510E

Selection and ordering data

Icn = 6 kA
Characteristic C
S type, selective

	Number of poles	Rated residual current IΔn (mA)	Rated current In (A)	Type AC Type code	Type A Type code
	1P+N 230 V AC	100	6	VRB515E-C6-AC-0.1-S-N	VRB515E-C6-A-0.1-S-N
			10	VRB515E-C10-AC-0.1-S-N	VRB515E-C10-A-0.1-S-N
			16	VRB515E-C16-AC-0.1-S-N	VRB515E-C16-A-0.1-S-N
			20	VRB515E-C20-AC-0.1-S-N	VRB515E-C20-A-0.1-S-N
			25	VRB515E-C25-AC-0.1-S-N	VRB515E-C25-A-0.1-S-N
			32	VRB515E-C32-AC-0.1-S-N	VRB515E-C32-A-0.1-S-N
			40	VRB515E-C40-AC-0.1-S-N	VRB515E-C40-A-0.1-S-N
			50	VRB515E-C50-AC-0.1-S-N	VRB515E-C50-A-0.1-S-N
			63	VRB515E-C63-AC-0.1-S-N	VRB515E-C63-A-0.1-S-N
			80	VRB515E-C80-AC-0.1-S-N	VRB515E-C80-A-0.1-S-N
		300	6	VRB515E-C6-AC-0.3-S-N	VRB515E-C6-A-0.3-S-N
			10	VRB515E-C10-AC-0.3-S-N	VRB515E-C10-A-0.3-S-N
			16	VRB515E-C16-AC-0.3-S-N	VRB515E-C16-A-0.3-S-N
			20	VRB515E-C20-AC-0.3-S-N	VRB515E-C20-A-0.3-S-N
			25	VRB515E-C25-AC-0.3-S-N	VRB515E-C25-A-0.3-S-N
			32	VRB515E-C32-AC-0.3-S-N	VRB515E-C32-A-0.3-S-N
			40	VRB515E-C40-AC-0.3-S-N	VRB515E-C40-A-0.3-S-N
			50	VRB515E-C50-AC-0.3-S-N	VRB515E-C50-A-0.3-S-N
			63	VRB515E-C63-AC-0.3-S-N	VRB515E-C63-A-0.3-S-N
			80	VRB515E-C80-AC-0.3-S-N	VRB515E-C80-A-0.3-S-N
	3P+N 400 V AC	100	6	VRB516E-C6-AC-0.1-S-N	VRB516E-C6-A-0.1-S-N
			10	VRB516E-C10-AC-0.1-S-N	VRB516E-C10-A-0.1-S-N
			16	VRB516E-C16-AC-0.1-S-N	VRB516E-C16-A-0.1-S-N
			20	VRB516E-C20-AC-0.1-S-N	VRB516E-C20-A-0.1-S-N
			25	VRB516E-C25-AC-0.1-S-N	VRB516E-C25-A-0.1-S-N
			32	VRB516E-C32-AC-0.1-S-N	VRB516E-C32-A-0.1-S-N
			40	VRB516E-C40-AC-0.1-S-N	VRB516E-C40-A-0.1-S-N
			50	VRB516E-C50-AC-0.1-S-N	VRB516E-C50-A-0.1-S-N
			63	VRB516E-C63-AC-0.1-S-N	VRB516E-C63-A-0.1-S-N
			80	VRB516E-C80-AC-0.1-S-N	VRB516E-C80-A-0.1-S-N
		300	6	VRB516E-C6-AC-0.3-S-N	VRB516E-C6-A-0.3-S-N
			10	VRB516E-C10-AC-0.3-S-N	VRB516E-C10-A-0.3-S-N
			16	VRB516E-C16-AC-0.3-S-N	VRB516E-C16-A-0.3-S-N
			20	VRB516E-C20-AC-0.3-S-N	VRB516E-C20-A-0.3-S-N
			25	VRB516E-C25-AC-0.3-S-N	VRB516E-C25-A-0.3-S-N
			32	VRB516E-C32-AC-0.3-S-N	VRB516E-C32-A-0.3-S-N
			40	VRB516E-C40-AC-0.3-S-N	VRB516E-C40-A-0.3-S-N
			50	VRB516E-C50-AC-0.3-S-N	VRB516E-C50-A-0.3-S-N
			63	VRB516E-C63-AC-0.3-S-N	VRB516E-C63-A-0.3-S-N
			80	VRB516E-C80-AC-0.3-S-N	VRB516E-C80-A-0.3-S-N
		50-100-300	6	VRB516E-C6-AC-0.01-0.03-S-N	VRB516E-C6-A-0.01-0.03-S-N
			10	VRB516E-C10-AC-0.01-0.03-S-N	VRB516E-C10-A-0.01-0.03-S-N
			16	VRB516E-C16-AC-0.01-0.03-S-N	VRB516E-C16-A-0.01-0.03-S-N
			20	VRB516E-C20-AC-0.01-0.03-S-N	VRB516E-C20-A-0.01-0.03-S-N
			25	VRB516E-C25-AC-0.01-0.03-S-N	VRB516E-C25-A-0.01-0.03-S-N
			32	VRB516E-C32-AC-0.01-0.03-S-N	VRB516E-C32-A-0.01-0.03-S-N
			40	VRB516E-C40-AC-0.01-0.03-S-N	VRB516E-C40-A-0.01-0.03-S-N
			50	VRB516E-C50-AC-0.01-0.03-S-N	VRB516E-C50-A-0.01-0.03-S-N
			63	VRB516E-C63-AC-0.01-0.03-S-N	VRB516E-C63-A-0.01-0.03-S-N
			80	VRB516E-C80-AC-0.01-0.03-S-N	VRB516E-C80-A-0.01-0.03-S-N

Selection and ordering data

Icn = 6 kA
Characteristic D
General type, instantaneous

	Number of poles	Rated residual current IΔn (mA)	Rated current In (A)	Type AC Type code	Type A Type code
	1P+N 230 V AC	30	6	VRB515E-D6-AC-0.03-N	VRB515E-D6-A-0.03-N
			10	VRB515E-D10-AC-0.03-N	VRB515E-D10-A-0.03-N
			16	VRB515E-D16-AC-0.03-N	VRB515E-D16-A-0.03-N
			20	VRB515E-D20-AC-0.03-N	VRB515E-D20-A-0.03-N
			25	VRB515E-D25-AC-0.03-N	VRB515E-D25-A-0.03-N
			32	VRB515E-D32-AC-0.03-N	VRB515E-D32-A-0.03-N
			40	VRB515E-D40-AC-0.03-N	VRB515E-D40-A-0.03-N
			50	VRB515E-D50-AC-0.03-N	VRB515E-D50-A-0.03-N
			63	VRB515E-D63-AC-0.03-N	VRB515E-D63-A-0.03-N
			80	VRB515E-D80-AC-0.03-N	VRB515E-D80-A-0.03-N
		100	6	VRB515E-D6-AC-0.1-N	VRB515E-D6-A-0.1-N
			10	VRB515E-D10-AC-0.1-N	VRB515E-D10-A-0.1-N
			16	VRB515E-D16-AC-0.1-N	VRB515E-D16-A-0.1-N
			20	VRB515E-D20-AC-0.1-N	VRB515E-D20-A-0.1-N
			25	VRB515E-D25-AC-0.1-N	VRB515E-D25-A-0.1-N
			32	VRB515E-D32-AC-0.1-N	VRB515E-D32-A-0.1-N
			40	VRB515E-D40-AC-0.1-N	VRB515E-D40-A-0.1-N
			50	VRB515E-D50-AC-0.1-N	VRB515E-D50-A-0.1-N
			63	VRB515E-D63-AC-0.1-N	VRB515E-D63-A-0.1-N
			80	VRB515E-D80-AC-0.1-N	VRB515E-D80-A-0.1-N
		300	6	VRB515E-D6-AC-0.3-N	VRB515E-D6-A-0.3-N
			10	VRB515E-D10-AC-0.3-N	VRB515E-D10-A-0.3-N
			16	VRB515E-D16-AC-0.3-N	VRB515E-D16-A-0.3-N
			20	VRB515E-D20-AC-0.3-N	VRB515E-D20-A-0.3-N
			25	VRB515E-D25-AC-0.3-N	VRB515E-D25-A-0.3-N
			32	VRB515E-D32-AC-0.3-N	VRB515E-D32-A-0.3-N
			40	VRB515E-D40-AC-0.3-N	VRB515E-D40-A-0.3-N
			50	VRB515E-D50-AC-0.3-N	VRB515E-D50-A-0.3-N
			63	VRB515E-D63-AC-0.3-N	VRB515E-D63-A-0.3-N
			80	VRB515E-D80-AC-0.3-N	VRB515E-D80-A-0.3-N
	3P+N 400 V AC	30	6	VRB516E-D6-AC-0.03-N	VRB516E-D6-A-0.03-N
			10	VRB516E-D10-AC-0.03-N	VRB516E-D10-A-0.03-N
			16	VRB516E-D16-AC-0.03-N	VRB516E-D16-A-0.03-N
			20	VRB516E-D20-AC-0.03-N	VRB516E-D20-A-0.03-N
			25	VRB516E-D25-AC-0.03-N	VRB516E-D25-A-0.03-N
			32	VRB516E-D32-AC-0.03-N	VRB516E-D32-A-0.03-N
			40	VRB516E-D40-AC-0.03-N	VRB516E-D40-A-0.03-N
			50	VRB516E-D50-AC-0.03-N	VRB516E-D50-A-0.03-N
			63	VRB516E-D63-AC-0.03-N	VRB516E-D63-A-0.03-N
			80	VRB516E-D80-AC-0.03-N	VRB516E-D80-A-0.03-N
		100	6	VRB516E-D6-AC-0.1-N	VRB516E-D6-A-0.1-N
			10	VRB516E-D10-AC-0.1-N	VRB516E-D10-A-0.1-N
			16	VRB516E-D16-AC-0.1-N	VRB516E-D16-A-0.1-N
			20	VRB516E-D20-AC-0.1-N	VRB516E-D20-A-0.1-N
			25	VRB516E-D25-AC-0.1-N	VRB516E-D25-A-0.1-N
			32	VRB516E-D32-AC-0.1-N	VRB516E-D32-A-0.1-N
			40	VRB516E-D40-AC-0.1-N	VRB516E-D40-A-0.1-N
			50	VRB516E-D50-AC-0.1-N	VRB516E-D50-A-0.1-N
			63	VRB516E-D63-AC-0.1-N	VRB516E-D63-A-0.1-N
			80	VRB516E-D80-AC-0.1-N	VRB516E-D80-A-0.1-N
		300	6	VRB516E-D6-AC-0.3-N	VRB516E-D6-A-0.3-N
			10	VRB516E-D10-AC-0.3-N	VRB516E-D10-A-0.3-N
			16	VRB516E-D16-AC-0.3-N	VRB516E-D16-A-0.3-N
			20	VRB516E-D20-AC-0.3-N	VRB516E-D20-A-0.3-N
			25	VRB516E-D25-AC-0.3-N	VRB516E-D25-A-0.3-N
			32	VRB516E-D32-AC-0.3-N	VRB516E-D32-A-0.3-N
			40	VRB516E-D40-AC-0.3-N	VRB516E-D40-A-0.3-N
			50	VRB516E-D50-AC-0.3-N	VRB516E-D50-A-0.3-N
			63	VRB516E-D63-AC-0.3-N	VRB516E-D63-A-0.3-N
			80	VRB516E-D80-AC-0.3-N	VRB516E-D80-A-0.3-N
		50-100-300	6	VRB516E-D6-AC-0.05-0.1-0.3-N	VRB516E-D6-A-0.05-0.1-0.3-N
			10	VRB516E-D10-AC-0.05-0.1-0.3-N	VRB516E-D10-A-0.05-0.1-0.3-N
			16	VRB516E-D16-AC-0.05-0.1-0.3-N	VRB516E-D16-A-0.05-0.1-0.3-N
			20	VRB516E-D20-AC-0.05-0.1-0.3-N	VRB516E-D20-A-0.05-0.1-0.3-N
			25	VRB516E-D25-AC-0.05-0.1-0.3-N	VRB516E-D25-A-0.05-0.1-0.3-N
			32	VRB516E-D32-AC-0.05-0.1-0.3-N	VRB516E-D32-A-0.05-0.1-0.3-N
			40	VRB516E-D40-AC-0.05-0.1-0.3-N	VRB516E-D40-A-0.05-0.1-0.3-N
			50	VRB516E-D50-AC-0.05-0.1-0.3-N	VRB516E-D50-A-0.05-0.1-0.3-N
			63	VRB516E-D63-AC-0.05-0.1-0.3-N	VRB516E-D63-A-0.05-0.1-0.3-N
			80	VRB516E-D80-AC-0.05-0.1-0.3-N	VRB516E-D80-A-0.05-0.1-0.3-N

Series VRB510E

Selection and ordering data

Icn = 6 kA
Characteristic D
S type, selective





Number of poles	Rated residual current IΔn (mA)	Rated current In (A)	Type AC Type code	Type A Type code
1P+N 230 V AC	100	6	VRB515E-D6-AC-0.1-S-N	VRB515E-D6-A-0.1-S-N
		10	VRB515E-D10-AC-0.1-S-N	VRB515E-D10-A-0.1-S-N
		16	VRB515E-D16-AC-0.1-S-N	VRB515E-D16-A-0.1-S-N
		20	VRB515E-D20-AC-0.1-S-N	VRB515E-D20-A-0.1-S-N
		25	VRB515E-D25-AC-0.1-S-N	VRB515E-D25-A-0.1-S-N
		32	VRB515E-D32-AC-0.1-S-N	VRB515E-D32-A-0.1-S-N
		40	VRB515E-D40-AC-0.1-S-N	VRB515E-D40-A-0.1-S-N
		50	VRB515E-D50-AC-0.1-S-N	VRB515E-D50-A-0.1-S-N
		63	VRB515E-D63-AC-0.1-S-N	VRB515E-D63-A-0.1-S-N
		80	VRB515E-D80-AC-0.1-S-N	VRB515E-D80-A-0.1-S-N
	300	6	VRB515E-D6-AC-0.3-S-N	VRB515E-D6-A-0.3-S-N
		10	VRB515E-D10-AC-0.3-S-N	VRB515E-D10-A-0.3-S-N
		16	VRB515E-D16-AC-0.3-S-N	VRB515E-D16-A-0.3-S-N
		20	VRB515E-D20-AC-0.3-S-N	VRB515E-D20-A-0.3-S-N
		25	VRB515E-D25-AC-0.3-S-N	VRB515E-D25-A-0.3-S-N
		32	VRB515E-D32-AC-0.3-S-N	VRB515E-D32-A-0.3-S-N
		40	VRB515E-D40-AC-0.3-S-N	VRB515E-D40-A-0.3-S-N
		50	VRB515E-D50-AC-0.3-S-N	VRB515E-D50-A-0.3-S-N
		63	VRB515E-D63-AC-0.3-S-N	VRB515E-D63-A-0.3-S-N
		80	VRB515E-D80-AC-0.3-S-N	VRB515E-D80-A-0.3-S-N
3P+N 400 V AC	100	6	VRB516E-D6-AC-0.1-S-N	VRB516E-D6-A-0.1-S-N
		10	VRB516E-D10-AC-0.1-S-N	VRB516E-D10-A-0.1-S-N
		16	VRB516E-D16-AC-0.1-S-N	VRB516E-D16-A-0.1-S-N
		20	VRB516E-D20-AC-0.1-S-N	VRB516E-D20-A-0.1-S-N
		25	VRB516E-D25-AC-0.1-S-N	VRB516E-D25-A-0.1-S-N
		32	VRB516E-D32-AC-0.1-S-N	VRB516E-D32-A-0.1-S-N
		40	VRB516E-D40-AC-0.1-S-N	VRB516E-D40-A-0.1-S-N
		50	VRB516E-D50-AC-0.1-S-N	VRB516E-D50-A-0.1-S-N
		63	VRB516E-D63-AC-0.1-S-N	VRB516E-D63-A-0.1-S-N
		80	VRB516E-D80-AC-0.1-S-N	VRB516E-D80-A-0.1-S-N
	300	6	VRB516E-D6-AC-0.3-S-N	VRB516E-D6-A-0.3-S-N
		10	VRB516E-D10-AC-0.3-S-N	VRB516E-D10-A-0.3-S-N
		16	VRB516E-D16-AC-0.3-S-N	VRB516E-D16-A-0.3-S-N
		20	VRB516E-D20-AC-0.3-S-N	VRB516E-D20-A-0.3-S-N
		25	VRB516E-D25-AC-0.3-S-N	VRB516E-D25-A-0.3-S-N
		32	VRB516E-D32-AC-0.3-S-N	VRB516E-D32-A-0.3-S-N
		40	VRB516E-D40-AC-0.3-S-N	VRB516E-D40-A-0.3-S-N
		50	VRB516E-D50-AC-0.3-S-N	VRB516E-D50-A-0.3-S-N
		63	VRB516E-D63-AC-0.3-S-N	VRB516E-D63-A-0.3-S-N
		80	VRB516E-D80-AC-0.3-S-N	VRB516E-D80-A-0.3-S-N
	50-100-300	6	VRB516E-D6-AC-0.01-0.03-S-N	VRB516E-D6-A-0.01-0.03-S-N
		10	VRB516E-D10-AC-0.01-0.03-S-N	VRB516E-D10-A-0.01-0.03-S-N
		16	VRB516E-D16-AC-0.01-0.03-S-N	VRB516E-D16-A-0.01-0.03-S-N
		20	VRB516E-D20-AC-0.01-0.03-S-N	VRB516E-D20-A-0.01-0.03-S-N
		25	VRB516E-D25-AC-0.01-0.03-S-N	VRB516E-D25-A-0.01-0.03-S-N
		32	VRB516E-D32-AC-0.01-0.03-S-N	VRB516E-D32-A-0.01-0.03-S-N
		40	VRB516E-D40-AC-0.01-0.03-S-N	VRB516E-D40-A-0.01-0.03-S-N
		50	VRB516E-D50-AC-0.01-0.03-S-N	VRB516E-D50-A-0.01-0.03-S-N
		63	VRB516E-D63-AC-0.01-0.03-S-N	VRB516E-D63-A-0.01-0.03-S-N
		80	VRB516E-D80-AC-0.01-0.03-S-N	VRB516E-D80-A-0.01-0.03-S-N

Selection and ordering data

Icn = 10 kA
Characteristic B
General type, instantaneous

	Number of poles	Rated residual current IΔn (mA)	Rated current In (A)	Type AC Type code	Type A Type code
	1P+N 230 V AC	30	6	VRB515E-B6-AC-0.03-H	VRB515E-B6-A-0.03-H
			10	VRB515E-B10-AC-0.03-H	VRB515E-B10-A-0.03-H
			16	VRB515E-B16-AC-0.03-H	VRB515E-B16-A-0.03-H
			20	VRB515E-B20-AC-0.03-H	VRB515E-B20-A-0.03-H
			25	VRB515E-B25-AC-0.03-H	VRB515E-B25-A-0.03-H
			32	VRB515E-B32-AC-0.03-H	VRB515E-B32-A-0.03-H
		100	6	VRB515E-B6-AC-0.1-H	VRB515E-B6-A-0.1-H
			10	VRB515E-B10-AC-0.1-H	VRB515E-B10-A-0.1-H
			16	VRB515E-B16-AC-0.1-H	VRB515E-B16-A-0.1-H
			20	VRB515E-B20-AC-0.1-H	VRB515E-B20-A-0.1-H
			25	VRB515E-B25-AC-0.1-H	VRB515E-B25-A-0.1-H
			32	VRB515E-B32-AC-0.1-H	VRB515E-B32-A-0.1-H
		300	6	VRB515E-B6-AC-0.3-H	VRB515E-B6-A-0.3-H
			10	VRB515E-B10-AC-0.3-H	VRB515E-B10-A-0.3-H
			16	VRB515E-B16-AC-0.3-H	VRB515E-B16-A-0.3-H
			20	VRB515E-B20-AC-0.3-H	VRB515E-B20-A-0.3-H
			25	VRB515E-B25-AC-0.3-H	VRB515E-B25-A-0.3-H
			32	VRB515E-B32-AC-0.3-H	VRB515E-B32-A-0.3-H
	3P+N 400 V AC	30	6	VRB516E-B6-AC-0.03-H	VRB516E-B6-A-0.03-H
			10	VRB516E-B10-AC-0.03-H	VRB516E-B10-A-0.03-H
			16	VRB516E-B16-AC-0.03-H	VRB516E-B16-A-0.03-H
			20	VRB516E-B20-AC-0.03-H	VRB516E-B20-A-0.03-H
			25	VRB516E-B25-AC-0.03-H	VRB516E-B25-A-0.03-H
			32	VRB516E-B32-AC-0.03-H	VRB516E-B32-A-0.03-H
		100	6	VRB516E-B6-AC-0.1-H	VRB516E-B6-A-0.1-H
			10	VRB516E-B10-AC-0.1-H	VRB516E-B10-A-0.1-H
			16	VRB516E-B16-AC-0.1-H	VRB516E-B16-A-0.1-H
			20	VRB516E-B20-AC-0.1-H	VRB516E-B20-A-0.1-H
			25	VRB516E-B25-AC-0.1-H	VRB516E-B25-A-0.1-H
			32	VRB516E-B32-AC-0.1-H	VRB516E-B32-A-0.1-H
		300	6	VRB516E-B6-AC-0.3-H	VRB516E-B6-A-0.3-H
			10	VRB516E-B10-AC-0.3-H	VRB516E-B10-A-0.3-H
			16	VRB516E-B16-AC-0.3-H	VRB516E-B16-A-0.3-H
			20	VRB516E-B20-AC-0.3-H	VRB516E-B20-A-0.3-H
			25	VRB516E-B25-AC-0.3-H	VRB516E-B25-A-0.3-H
			32	VRB516E-B32-AC-0.3-H	VRB516E-B32-A-0.3-H
		50-100-300	6	VRB516E-B6-AC-0.05-0.1-0.3-H	VRB516E-B6-A-0.05-0.1-0.3-H
			10	VRB516E-B10-AC-0.05-0.1-0.3-H	VRB516E-B10-A-0.05-0.1-0.3-H
			16	VRB516E-B16-AC-0.05-0.1-0.3-H	VRB516E-B16-A-0.05-0.1-0.3-H
			20	VRB516E-B20-AC-0.05-0.1-0.3-H	VRB516E-B20-A-0.05-0.1-0.3-H
			25	VRB516E-B25-AC-0.05-0.1-0.3-H	VRB516E-B25-A-0.05-0.1-0.3-H
			32	VRB516E-B32-AC-0.05-0.1-0.3-H	VRB516E-B32-A-0.05-0.1-0.3-H

Selection and ordering data

Icn = 10 kA
Characteristic B
S type, selective

	Number of poles	Rated residual current IΔn (mA)	Rated current In (A)	Type AC	Type A
				Type code	Type code
	1P+N 230 V AC	100	6	VRB515E-B6-AC-0.1-S-H	VRB515E-B6-A-0.1-S-H
			10	VRB515E-B10-AC-0.1-S-H	VRB515E-B10-A-0.1-S-H
			16	VRB515E-B16-AC-0.1-S-H	VRB515E-B16-A-0.1-S-H
			20	VRB515E-B20-AC-0.1-S-H	VRB515E-B20-A-0.1-S-H
			25	VRB515E-B25-AC-0.1-S-H	VRB515E-B25-A-0.1-S-H
			32	VRB515E-B32-AC-0.1-S-H	VRB515E-B32-A-0.1-S-H
		300	6	VRB515E-B6-AC-0.3-S-H	VRB515E-B6-A-0.3-S-H
			10	VRB515E-B10-AC-0.3-S-H	VRB515E-B10-A-0.3-S-H
			16	VRB515E-B16-AC-0.3-S-H	VRB515E-B16-A-0.3-S-H
			20	VRB515E-B20-AC-0.3-S-H	VRB515E-B20-A-0.3-S-H
			25	VRB515E-B25-AC-0.3-S-H	VRB515E-B25-A-0.3-S-H
			32	VRB515E-B32-AC-0.3-S-H	VRB515E-B32-A-0.3-S-H
	3P+N 400 V AC	100	6	VRB516E-B6-AC-0.1-S-H	VRB516E-B6-A-0.1-S-H
			10	VRB516E-B10-AC-0.1-S-H	VRB516E-B10-A-0.1-S-H
			16	VRB516E-B16-AC-0.1-S-H	VRB516E-B16-A-0.1-S-H
			20	VRB516E-B20-AC-0.1-S-H	VRB516E-B20-A-0.1-S-H
			25	VRB516E-B25-AC-0.1-S-H	VRB516E-B25-A-0.1-S-H
			32	VRB516E-B32-AC-0.1-S-H	VRB516E-B32-A-0.1-S-H
		300	6	VRB516E-B6-AC-0.3-S-H	VRB516E-B6-A-0.3-S-H
			10	VRB516E-B10-AC-0.3-S-H	VRB516E-B10-A-0.3-S-H
			16	VRB516E-B16-AC-0.3-S-H	VRB516E-B16-A-0.3-S-H
			20	VRB516E-B20-AC-0.3-S-H	VRB516E-B20-A-0.3-S-H
			25	VRB516E-B25-AC-0.3-S-H	VRB516E-B25-A-0.3-S-H
			32	VRB516E-B32-AC-0.3-S-H	VRB516E-B32-A-0.3-S-H
		50-100-300	6	VRB516E-B6-AC-0.01-0.03-S-H	VRB516E-B6-A-0.01-0.03-S-H
			10	VRB516E-B10-AC-0.01-0.03-S-H	VRB516E-B10-A-0.01-0.03-S-H
			16	VRB516E-B16-AC-0.01-0.03-S-H	VRB516E-B16-A-0.01-0.03-S-H
			20	VRB516E-B20-AC-0.01-0.03-S-H	VRB516E-B20-A-0.01-0.03-S-H
			25	VRB516E-B25-AC-0.01-0.03-S-H	VRB516E-B25-A-0.01-0.03-S-H
			32	VRB516E-B32-AC-0.01-0.03-S-H	VRB516E-B32-A-0.01-0.03-S-H

Selection and ordering data

Icn = 10 kA
Characteristic C
General type, instantaneous

	Number of poles	Rated residual current IΔn (mA)	Rated current In (A)	Type AC Type code	Type A Type code
	1P+N 230 V AC	30	6	VRB515E-C6-AC-0.03-H	VRB515E-C6-A-0.03-H
			10	VRB515E-C10-AC-0.03-H	VRB515E-C10-A-0.03-H
			16	VRB515E-C16-AC-0.03-H	VRB515E-C16-A-0.03-H
			20	VRB515E-C20-AC-0.03-H	VRB515E-C20-A-0.03-H
			25	VRB515E-C25-AC-0.03-H	VRB515E-C25-A-0.03-H
			32	VRB515E-C32-AC-0.03-H	VRB515E-C32-A-0.03-H
		100	6	VRB515E-C6-AC-0.1-H	VRB515E-C6-A-0.1-H
			10	VRB515E-C10-AC-0.1-H	VRB515E-C10-A-0.1-H
			16	VRB515E-C16-AC-0.1-H	VRB515E-C16-A-0.1-H
			20	VRB515E-C20-AC-0.1-H	VRB515E-C20-A-0.1-H
			25	VRB515E-C25-AC-0.1-H	VRB515E-C25-A-0.1-H
			32	VRB515E-C32-AC-0.1-H	VRB515E-C32-A-0.1-H
		300	6	VRB515E-C6-AC-0.3-H	VRB515E-C6-A-0.3-H
			10	VRB515E-C10-AC-0.3-H	VRB515E-C10-A-0.3-H
			16	VRB515E-C16-AC-0.3-H	VRB515E-C16-A-0.3-H
			20	VRB515E-C20-AC-0.3-H	VRB515E-C20-A-0.3-H
			25	VRB515E-C25-AC-0.3-H	VRB515E-C25-A-0.3-H
			32	VRB515E-C32-AC-0.3-H	VRB515E-C32-A-0.3-H
	3P+N 400 V AC	30	6	VRB516E-C6-AC-0.03-H	VRB516E-C6-A-0.03-H
			10	VRB516E-C10-AC-0.03-H	VRB516E-C10-A-0.03-H
			16	VRB516E-C16-AC-0.03-H	VRB516E-C16-A-0.03-H
			20	VRB516E-C20-AC-0.03-H	VRB516E-C20-A-0.03-H
			25	VRB516E-C25-AC-0.03-H	VRB516E-C25-A-0.03-H
			32	VRB516E-C32-AC-0.03-H	VRB516E-C32-A-0.03-H
		100	6	VRB516E-C6-AC-0.1-H	VRB516E-C6-A-0.1-H
			10	VRB516E-C10-AC-0.1-H	VRB516E-C10-A-0.1-H
			16	VRB516E-C16-AC-0.1-H	VRB516E-C16-A-0.1-H
			20	VRB516E-C20-AC-0.1-H	VRB516E-C20-A-0.1-H
			25	VRB516E-C25-AC-0.1-H	VRB516E-C25-A-0.1-H
			32	VRB516E-C32-AC-0.1-H	VRB516E-C32-A-0.1-H
		300	6	VRB516E-C6-AC-0.3-H	VRB516E-C6-A-0.3-H
			10	VRB516E-C10-AC-0.3-H	VRB516E-C10-A-0.3-H
			16	VRB516E-C16-AC-0.3-H	VRB516E-C16-A-0.3-H
			20	VRB516E-C20-AC-0.3-H	VRB516E-C20-A-0.3-H
			25	VRB516E-C25-AC-0.3-H	VRB516E-C25-A-0.3-H
			32	VRB516E-C32-AC-0.3-H	VRB516E-C32-A-0.3-H
		50-100-300	6	VRB516E-C6-AC-0.05-0.1-0.3-H	VRB516E-C6-A-0.05-0.1-0.3-H
			10	VRB516E-C10-AC-0.05-0.1-0.3-H	VRB516E-C10-A-0.05-0.1-0.3-H
			16	VRB516E-C16-AC-0.05-0.1-0.3-H	VRB516E-C16-A-0.05-0.1-0.3-H
			20	VRB516E-C20-AC-0.05-0.1-0.3-H	VRB516E-C20-A-0.05-0.1-0.3-H
			25	VRB516E-C25-AC-0.05-0.1-0.3-H	VRB516E-C25-A-0.05-0.1-0.3-H
			32	VRB516E-C32-AC-0.05-0.1-0.3-H	VRB516E-C32-A-0.05-0.1-0.3-H

Series VRB510E

Selection and ordering data

Icn = 10 kA
Characteristic C
S type, selective

	Number of poles	Rated residual current IΔn (mA)	Rated current In (A)	Type AC	Type A
				Type code	Type code
	1P+N 230 V AC	100	6	VRB515E-C6-AC-0.1-S-H	VRB515E-C6-A-0.1-S-H
			10	VRB515E-C10-AC-0.1-S-H	VRB515E-C10-A-0.1-S-H
			16	VRB515E-C16-AC-0.1-S-H	VRB515E-C16-A-0.1-S-H
			20	VRB515E-C20-AC-0.1-S-H	VRB515E-C20-A-0.1-S-H
			25	VRB515E-C25-AC-0.1-S-H	VRB515E-C25-A-0.1-S-H
			32	VRB515E-C32-AC-0.1-S-H	VRB515E-C32-A-0.1-S-H
		300	6	VRB515E-C6-AC-0.3-S-H	VRB515E-C6-A-0.3-S-H
			10	VRB515E-C10-AC-0.3-S-H	VRB515E-C10-A-0.3-S-H
			16	VRB515E-C16-AC-0.3-S-H	VRB515E-C16-A-0.3-S-H
			20	VRB515E-C20-AC-0.3-S-H	VRB515E-C20-A-0.3-S-H
			25	VRB515E-C25-AC-0.3-S-H	VRB515E-C25-A-0.3-S-H
			32	VRB515E-C32-AC-0.3-S-H	VRB515E-C32-A-0.3-S-H
	3P+N 400 V AC	100	6	VRB516E-C6-AC-0.1-S-H	VRB516E-C6-A-0.1-S-H
			10	VRB516E-C10-AC-0.1-S-H	VRB516E-C10-A-0.1-S-H
			16	VRB516E-C16-AC-0.1-S-H	VRB516E-C16-A-0.1-S-H
			20	VRB516E-C20-AC-0.1-S-H	VRB516E-C20-A-0.1-S-H
			25	VRB516E-C25-AC-0.1-S-H	VRB516E-C25-A-0.1-S-H
			32	VRB516E-C32-AC-0.1-S-H	VRB516E-C32-A-0.1-S-H
		300	6	VRB516E-C6-AC-0.3-S-H	VRB516E-C6-A-0.3-S-H
			10	VRB516E-C10-AC-0.3-S-H	VRB516E-C10-A-0.3-S-H
			16	VRB516E-C16-AC-0.3-S-H	VRB516E-C16-A-0.3-S-H
			20	VRB516E-C20-AC-0.3-S-H	VRB516E-C20-A-0.3-S-H
			25	VRB516E-C25-AC-0.3-S-H	VRB516E-C25-A-0.3-S-H
			32	VRB516E-C32-AC-0.3-S-H	VRB516E-C32-A-0.3-S-H
		50-100-300	6	VRB516E-C6-AC-0.01-0.03-S-H	VRB516E-C6-A-0.01-0.03-S-H
			10	VRB516E-C10-AC-0.01-0.03-S-H	VRB516E-C10-A-0.01-0.03-S-H
			16	VRB516E-C16-AC-0.01-0.03-S-H	VRB516E-C16-A-0.01-0.03-S-H
			20	VRB516E-C20-AC-0.01-0.03-S-H	VRB516E-C20-A-0.01-0.03-S-H
			25	VRB516E-C25-AC-0.01-0.03-S-H	VRB516E-C25-A-0.01-0.03-S-H
			32	VRB516E-C32-AC-0.01-0.03-S-H	VRB516E-C32-A-0.01-0.03-S-H

Selection and ordering data

Icn = 10 kA
Characteristic D
General type, instantaneous

	Number of poles	Rated residual current IΔn (mA)	Rated current In (A)	Type AC Type code	Type A Type code
	1P+N 230 V AC	30	6	VRB515E-D6-AC-0.03-H	VRB515E-D6-A-0.03-H
			10	VRB515E-D10-AC-0.03-H	VRB515E-D10-A-0.03-H
			16	VRB515E-D16-AC-0.03-H	VRB515E-D16-A-0.03-H
			20	VRB515E-D20-AC-0.03-H	VRB515E-D20-A-0.03-H
			25	VRB515E-D25-AC-0.03-H	VRB515E-D25-A-0.03-H
			32	VRB515E-D32-AC-0.03-H	VRB515E-D32-A-0.03-H
		100	6	VRB515E-D6-AC-0.1-H	VRB515E-D6-A-0.1-H
			10	VRB515E-D10-AC-0.1-H	VRB515E-D10-A-0.1-H
			16	VRB515E-D16-AC-0.1-H	VRB515E-D16-A-0.1-H
			20	VRB515E-D20-AC-0.1-H	VRB515E-D20-A-0.1-H
			25	VRB515E-D25-AC-0.1-H	VRB515E-D25-A-0.1-H
			32	VRB515E-D32-AC-0.1-H	VRB515E-D32-A-0.1-H
		300	6	VRB515E-D6-AC-0.3-H	VRB515E-D6-A-0.3-H
			10	VRB515E-D10-AC-0.3-H	VRB515E-D10-A-0.3-H
			16	VRB515E-D16-AC-0.3-H	VRB515E-D16-A-0.3-H
			20	VRB515E-D20-AC-0.3-H	VRB515E-D20-A-0.3-H
			25	VRB515E-D25-AC-0.3-H	VRB515E-D25-A-0.3-H
			32	VRB515E-D32-AC-0.3-H	VRB515E-D32-A-0.3-H
	3P+N 400 V AC	30	6	VRB516E-D6-AC-0.03-H	VRB516E-D6-A-0.03-H
			10	VRB516E-D10-AC-0.03-H	VRB516E-D10-A-0.03-H
			16	VRB516E-D16-AC-0.03-H	VRB516E-D16-A-0.03-H
			20	VRB516E-D20-AC-0.03-H	VRB516E-D20-A-0.03-H
			25	VRB516E-D25-AC-0.03-H	VRB516E-D25-A-0.03-H
			32	VRB516E-D32-AC-0.03-H	VRB516E-D32-A-0.03-H
		100	6	VRB516E-D6-AC-0.1-H	VRB516E-D6-A-0.1-H
			10	VRB516E-D10-AC-0.1-H	VRB516E-D10-A-0.1-H
			16	VRB516E-D16-AC-0.1-H	VRB516E-D16-A-0.1-H
			20	VRB516E-D20-AC-0.1-H	VRB516E-D20-A-0.1-H
			25	VRB516E-D25-AC-0.1-H	VRB516E-D25-A-0.1-H
			32	VRB516E-D32-AC-0.1-H	VRB516E-D32-A-0.1-H
		300	6	VRB516E-D6-AC-0.3-H	VRB516E-D6-A-0.3-H
			10	VRB516E-D10-AC-0.3-H	VRB516E-D10-A-0.3-H
			16	VRB516E-D16-AC-0.3-H	VRB516E-D16-A-0.3-H
			20	VRB516E-D20-AC-0.3-H	VRB516E-D20-A-0.3-H
			25	VRB516E-D25-AC-0.3-H	VRB516E-D25-A-0.3-H
			32	VRB516E-D32-AC-0.3-H	VRB516E-D32-A-0.3-H
		50-100-300	6	VRB516E-D6-AC-0.05-0.1-0.3-H	VRB516E-D6-A-0.05-0.1-0.3-H
			10	VRB516E-D10-AC-0.05-0.1-0.3-H	VRB516E-D10-A-0.05-0.1-0.3-H
			16	VRB516E-D16-AC-0.05-0.1-0.3-H	VRB516E-D16-A-0.05-0.1-0.3-H
			20	VRB516E-D20-AC-0.05-0.1-0.3-H	VRB516E-D20-A-0.05-0.1-0.3-H
			25	VRB516E-D25-AC-0.05-0.1-0.3-H	VRB516E-D25-A-0.05-0.1-0.3-H
			32	VRB516E-D32-AC-0.05-0.1-0.3-H	VRB516E-D32-A-0.05-0.1-0.3-H

Selection and ordering data

Icn = 10 kA
Characteristic D
S type, selective

	Number of poles	Rated residual current IΔn (mA)	Rated current In (A)	Type AC	Type A
				Type code	Type code
	1P+N 230 V AC	100	6	VRB515E-D6-AC-0.1-S-H	VRB515E-D6-A-0.1-S-H
			10	VRB515E-D10-AC-0.1-S-H	VRB515E-D10-A-0.1-S-H
			16	VRB515E-D16-AC-0.1-S-H	VRB515E-D16-A-0.1-S-H
			20	VRB515E-D20-AC-0.1-S-H	VRB515E-D20-A-0.1-S-H
			25	VRB515E-D25-AC-0.1-S-H	VRB515E-D25-A-0.1-S-H
			32	VRB515E-D32-AC-0.1-S-H	VRB515E-D32-A-0.1-S-H
		300	6	VRB515E-D6-AC-0.3-S-H	VRB515E-D6-A-0.3-S-H
			10	VRB515E-D10-AC-0.3-S-H	VRB515E-D10-A-0.3-S-H
			16	VRB515E-D16-AC-0.3-S-H	VRB515E-D16-A-0.3-S-H
			20	VRB515E-D20-AC-0.3-S-H	VRB515E-D20-A-0.3-S-H
			25	VRB515E-D25-AC-0.3-S-H	VRB515E-D25-A-0.3-S-H
			32	VRB515E-D32-AC-0.3-S-H	VRB515E-D32-A-0.3-S-H
	3P+N 400 V AC	100	6	VRB516E-D6-AC-0.1-S-H	VRB516E-D6-A-0.1-S-H
			10	VRB516E-D10-AC-0.1-S-H	VRB516E-D10-A-0.1-S-H
			16	VRB516E-D16-AC-0.1-S-H	VRB516E-D16-A-0.1-S-H
			20	VRB516E-D20-AC-0.1-S-H	VRB516E-D20-A-0.1-S-H
			25	VRB516E-D25-AC-0.1-S-H	VRB516E-D25-A-0.1-S-H
			32	VRB516E-D32-AC-0.1-S-H	VRB516E-D32-A-0.1-S-H
		300	6	VRB516E-D6-AC-0.3-S-H	VRB516E-D6-A-0.3-S-H
			10	VRB516E-D10-AC-0.3-S-H	VRB516E-D10-A-0.3-S-H
			16	VRB516E-D16-AC-0.3-S-H	VRB516E-D16-A-0.3-S-H
			20	VRB516E-D20-AC-0.3-S-H	VRB516E-D20-A-0.3-S-H
			25	VRB516E-D25-AC-0.3-S-H	VRB516E-D25-A-0.3-S-H
			32	VRB516E-D32-AC-0.3-S-H	VRB516E-D32-A-0.3-S-H
		50-100-300	6	VRB516E-D6-AC-0.01-0.03-S-H	VRB516E-D6-A-0.01-0.03-S-H
			10	VRB516E-D10-AC-0.01-0.03-S-H	VRB516E-D10-A-0.01-0.03-S-H
			16	VRB516E-D16-AC-0.01-0.03-S-H	VRB516E-D16-A-0.01-0.03-S-H
			20	VRB516E-D20-AC-0.01-0.03-S-H	VRB516E-D20-A-0.01-0.03-S-H
			25	VRB516E-D25-AC-0.01-0.03-S-H	VRB516E-D25-A-0.01-0.03-S-H
			32	VRB516E-D32-AC-0.01-0.03-S-H	VRB516E-D32-A-0.01-0.03-S-H

Outline and installation dimensions

unit in mm

VRB515E

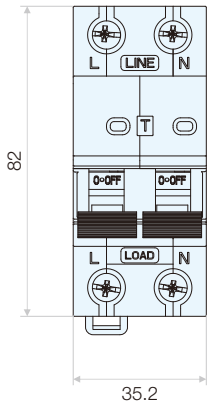

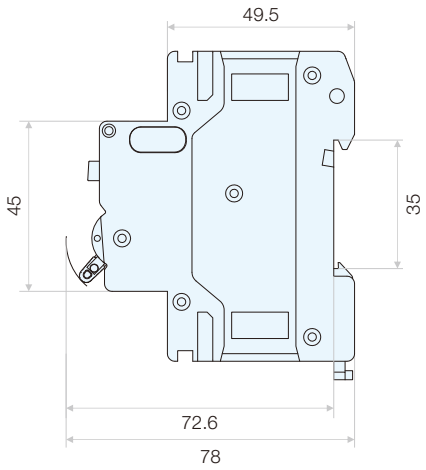

VRB516E

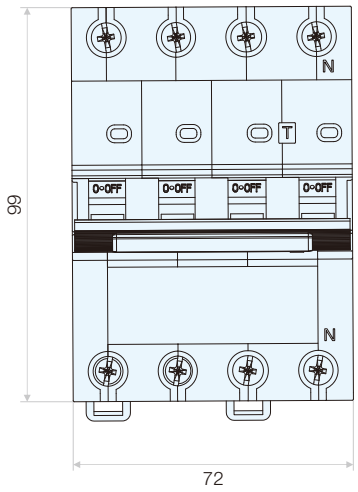

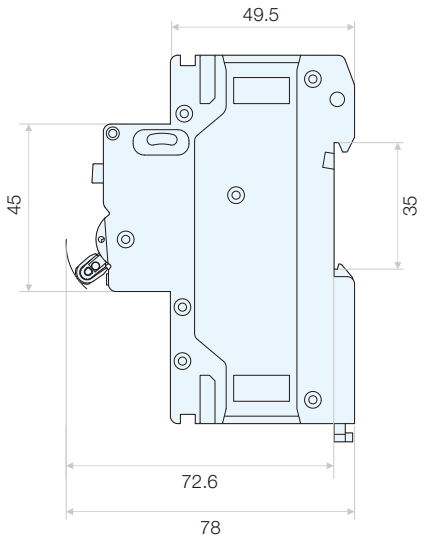

Surge Protective Devices
Series 3SU1

Functions

- Types 2 surge arresters
- Handling energy from distant / indirect lightning strikes or from switching operations
- Feature lower protection level (Up)
- Recommended at the incoming of installation for locations with no exposure to direct lightning impulses
- 3SU1 DC provide protection for equipment on photovoltaic connected system, against transient overvoltages that occur on the electrical network



Technical specifications

Type		**3SU1**																**3SU1DC**		
Standard		IEC/EN 61643-11																IEC/EN 61643-31		
Type/Test class		2 / II																2 / II		
Number of poles		1P, 2P, 3P, 4P, 1P+N, 3P+N																3P		
Type of current		AC																DC		
Frequency	Hz	50/60																-		
Max. discharge current (8/20µs) I_{max}	kA	10				20				40				60				40		
Norminal discharge current (8/20µs) I_n	kA	5				10				20				30				20		
Max. Cont. operating voltage U_c	V AC	275	320	385	440	275	320	385	440	275	320	385	440	275	320	385	440	-		
Max. Cont. operating voltage U_{CPV}	V DC	-	-	-	-	-	-	-	-	-	-	-	-	-	-	-	-	300	600	1000
Voltage protection level [L-PE] U_p	kV	1.3	1.5	1.8	2.3	1.3	1.5	1.8	2.3	1.3	1.5	1.8	2.3	1.5	1.7	1.8	2.4	-	-	-
Voltage protection level [(DC+/DC-)-PE] U_p	kV	-	-	-	-	-	-	-	-	-	-	-	-	-	-	-	-	1.8	2.6	4.0
Degree of protection		IP20, with connected conductors																		
Pluggable cartridge		√																		
State indicator		√																		
Remote signal contact		√																		
Conductor cross-sections																				
Solid and stranded	mm^2	2 ... 35																		
Finely stranded with end sleeve	mm^2	2 ... 25																		
Terminal tightening torque	N·m	2.8																		
Ambient temperature	°C	-25 ... +70, max. 95% humidity																		
Storage temperature	°C	-40 ... +75																		

Technical specification of the remote signal contact

- Contact type: 1 NO +1 NC
- Min. load: 24 V DC - 10 mA
- Max. load: 240 V AC - 1 A

Selection and ordering data

		Auxiliary contact	Number of poles	Max. Cont. operating voltage Uc (V)	Max. discharge current Imax (8/20) per pole (kA)	Nominal discharge current In (8/20) per pole (kA)	Voltage protection level Up (kV)	Type code
		without	1P	275	10	5	1.3	U1 10D1/275
					20	10	1.3	U1 20D1/275
					40	20	1.3	U1 40C1/275
					60	30	1.5	U1 60C1/275
		without	1P+N	275	10	5	1.3	U1 10D1N/275
					20	10	1.3	U1 20D1N/275
					40	20	1.3	U1 40C1N/275
					60	30	1.5	U1 60C1N/275
		with	1P	275	10	5	1.3	U1C 10D1/275
					20	10	1.3	U1C 20D1/275
					40	20	1.3	U1C 40C1/275
					60	30	1.5	U1C 60C1/275
		without	2P	275	10	5	1.3	U1 10D2/275
					20	10	1.3	U1 20D2/275
					40	20	1.3	U1 40C2/275
					60	30	1.5	U1 60C2/275
		with	2P	275	10	5	1.3	U1C 10D2/275
					20	10	1.3	U1C 20D2/275
					40	20	1.3	U1C 40C2/275
					60	30	1.5	U1C 60C2/275
		without	3P	275	10	5	1.3	U1 10D3/275
					20	10	1.3	U1 20D3/275
					40	20	1.3	U1 40C3/275
					60	30	1.5	U1 60C3/275
	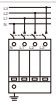	without	3P+N	275	10	5	1.3	U1 10D3N/275
					20	10	1.3	U1 20D3N/275
					40	20	1.3	U1 40C3N/275
					60	30	1.5	U1 60C3N/275
		with	3P	275	10	5	1.3	U1C 10D3/275
					20	10	1.3	U1C 20D3/275
					40	20	1.3	U1C 40C3/275
					60	30	1.5	U1C 60C3/275
	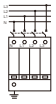	without	4P	275	10	5	1.3	U1 10D4/275
					20	10	1.3	U1 20D4/275
					40	20	1.3	U1 40C4/275
					60	30	1.5	U1 60C4/275
	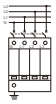	with	4P	275	10	5	1.3	U1C 10D4/275
					20	10	1.3	U1C 20D4/275
					40	20	1.3	U1C 40C4/275
					60	30	1.5	U1C 60C4/275

3

Selection and ordering data

		Auxiliary contact	Number of poles	Max. Cont. operating voltage Uc (V)	Max. discharge current Imax (8/20) per pole (kA)	Nominal discharge current In (8/20) per pole (kA)	Voltage protection level Up (kV)	Type code
		without	1P	385	10	5	1.8	U1 10D1/385
					20	10	1.8	U1 20D1/385
					40	20	1.8	U1 40C1/385
					60	30	1.8	U1 60C1/385
		without	1P+N	385	10	5	1.8	U1 10D1N/385
					20	10	1.8	U1 20D1N/385
					40	20	1.8	U1 40C1N/385
					60	30	1.8	U1 60C1N/385
		with	1P	385	10	5	1.8	U1C 10D1/385
					20	10	1.8	U1C 20D1/385
					40	20	1.8	U1C 40C1/385
					60	30	1.8	U1C 60C1/385
		without	2P	385	10	5	1.8	U1 10D2/385
					20	10	1.8	U1 20D2/385
					40	20	1.8	U1 40C2/385
					60	30	1.8	U1 60C2/385
		with	2P	385	10	5	1.8	U1C 10D2/385
					20	10	1.8	U1C 20D2/385
					40	20	1.8	U1C 40C2/385
					60	30	1.8	U1C 60C2/385
	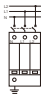	without	3P	385	10	5	1.8	U1 10D3/385
					20	10	1.8	U1 20D3/385
					40	20	1.8	U1 40C3/385
					60	30	1.8	U1 60C3/385
	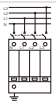	without	3P+N	385	10	5	1.8	U1 10D3N/385
					20	10	1.8	U1 20D3N/385
					40	20	1.8	U1 40C3N/385
					60	30	1.8	U1 60C3N/385
	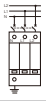	with	3P	385	10	5	1.8	U1C 10D3/385
					20	10	1.8	U1C 20D3/385
					40	20	1.8	U1C 40C3/385
					60	30	1.8	U1C 60C3/385
	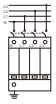	without	4P	385	10	5	1.8	U1 10D4/385
					20	10	1.8	U1 20D4/385
					40	20	1.8	U1 40C4/385
					60	30	1.8	U1 60C4/385
	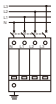	with	4P	385	10	5	1.8	U1C 10D4/385
					20	10	1.8	U1C 20D4/385
					40	20	1.8	U1C 40C4/385
					60	30	1.8	U1C 60C4/385

Selection and ordering data

Replacement cartridges for surge protective devices type 2





Number of poles	Max. Cont. operating voltage Uc (V)	Max. discharge current Imax (8/20) per pole (kA)	Nominal discharge current In (8/20) per pole (kA)	Voltage protection level Up (kV)	Type code
1P	275	10	5	1.3	U1RP 27510
		20	10	1.3	U1RP 27520
		40	20	1.3	U1RP 27540
		60	30	1.5	U1RP 27560
	320	10	5	1.5	U1RP 32010
		20	10	1.5	U1RP 32020
		40	20	1.5	U1RP 32040
		60	30	1.7	U1RP 32060
	385	10	5	1.8	U1RP 38510
		20	10	1.8	U1RP 38520
		40	20	1.8	U1RP 38540
		60	30	1.8	U1RP 38560
	440	10	5	2.3	U1RP 44010
		20	10	2.3	U1RP 44020
		40	20	2.3	U1RP 44040
		60	30	2.4	U1RP 44060

Surge protective devices, photovoltaic



Number of poles	Max. Cont. operating voltage Uc (V)	Max. discharge current Imax (8/20) per pole (kA)	Nominal discharge current In (8/20) per pole (kA)	Voltage protection level Up (kV)	Type code
3	300	40	20	1.8	U1 300D
	600	40	20	2.6	U1 600D
	1000	40	20	4.0	U1 1000D

Switch Disconnectors
Series VG510

3

Functions

- Making and breaking under load condition
- Providing safety isolation for terminal distribution system
- Used in residential building, non-residential building

Technical specifications

- Standard: IEC 60947-3
- Rated current Ie (A): 32, 40, 63, 80, 100
- Rated voltage Ui (V AC): 230/400
- Rated insulation voltage Vi (V AC): 500
- Number of poles: 1, 2, 3, 4
- Degree of protection: IP20, with connected conductors
- Electrical life (times): 1,500
- Mechanical life (times): 8,500
- Rated short-time withstand current 12 Ie: 1 s
- Mounting position: Any
- Conductor cross-sections
- Solid and stranded (mm^2): 0.75-35
- Finely stranded with end sleeve (mm^2): 0.75-25
- Terminal tightening torque (N·m): 2.5
- Ambient temperature (ºC): -25~+45, max. 95% humidity
- Storage temperature (ºC): -40~+75
- Altitude Max. (meters): 2,000

Features

- The handle provides a clear indication of the contact position
- Adequate printing of all data on the front provides long-term identification
- Based the technology of MCB series 3SB1-63N, similar design to series 3SB1-63N.
- Matched with series MCB 3SB5, 3SB52, 3SB1-63N
- Full sets of accessories

Outline and installation dimensions

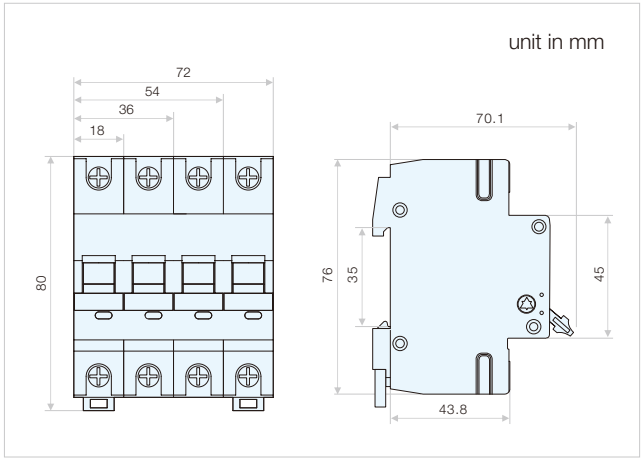



Selection and ordering data

Number of poles (P)	Rated current In (A)	Type code
1	32	VG511-32
	40	VG511-40
	63	VG511-63
	80	VG511-80
	100	VG511-100
2	32	VG512-32
	40	VG512-40
	63	VG512-63
	80	VG512-80
	100	VG512-100
3	32	VG513-32
	40	VG513-40
	63	VG513-63
	80	VG513-80
	100	VG513-100
4	32	VG514-32
	40	VG514-40
	63	VG514-63
	80	VG514-80
	100	VG514-100

Functions

- Widely used in terminal distribution system



Technical specifications

Type	VFG5102X	VFG5103 VFG5103X	VFG5106 VFG5106X	VFG5112 VFG5112X
Standards	IEC 60269			
Fuse	8×32	10×38	14×51	22×58
Poles (P)	1	1, 2, 3	1, 2, 3	1, 2, 3
Type of current	AC			
Frequency (Hz)	50/60			
Rated voltage Un (V)	230/400			
Rated current (A)	20	32	63	100
Degree of protection	IP20			
Conductor cross-sections				
Solid and stranded (mm^2)	2-25		2.5-35	4-50
Finely stranded with end sleeve (mm^2)	2-16		2.5-25	4-35
Terminals				
Terminal tightening torque (N·m)	2.5			
Ambient temperature (°C)	-5 to +40, max. 95 % humidity			
Storage temperature (°C)	-40 ~ +75			
Connection capacity (mm^2)	1-25			

Selection and ordering data



Rated current (A)	Rated current In (A)	Without indicator Type code	With indicator Type code
20	1	-	VFG51021X
32	1	VFG51032	VFG51031X
	2	VFG51032	VFG51032X
	3	VFG51033	VFG51033X
63	1	VFG51061	VFG51061X
	2	VFG51062	VFG51062X
	3	VFG51063	VFG51063X
125	1	VFG51121	VFG51121X
	2	VFG51122	VFG51122X
	3	VFG51123	VFG51123X

Outline and installation dimensions

unit in mm

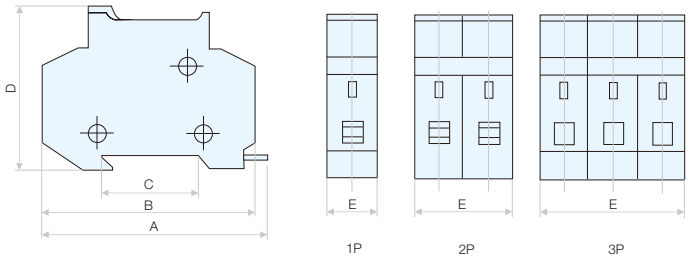

Type	A (mm)	B (mm)	C (mm)	D (mm)	E (mm)
VFG51021X	69.5	-	-	47	20
VFG51031	82	78	35	63	18
VFG51031X	82	78	35	63	18
VFG51032	82	78	35	63	36
VFG51032X	82	78	35	63	36
VFG51033	82	78	35	63	54
VFG51033X	82	78	35	63	54
VFG51061	106	103	35	80	24
VFG51061X	106	103	35	80	24
VFG51062	106	103	35	80	48
VFG51062X	106	103	35	80	48
VFG51063	106	103	35	80	72
VFG51063X	106	103	35	80	72
VFG51121	134	126	35	104	36
VFG51121X	134	126	35	104	36
VFG51122	134	126	35	104	72
VFG51122X	134	126	35	104	72
VFG51123	134	126	35	104	108
VFG51123X	134	126	35	104	108

Modular Contactors
Series VCH511

Functions

- Remote switching and controlling of power circuits
- Used in building automation, controlling of small pumps, ventilations, heating systems, lighting systems, and so on



Technical specifications

Type	VCH5102	VCH5106
Frame current (A)	25	63
Standards	IEC 61095	IEC 60947-4-1
Number of poles	2, 4	
Type of current	AC	
Frequency (Hz)	50/60	
Rated voltage Un (V)	230/400	
Rated current In in AC-7a / AC1 (A)	10, 16, 20, 25	25, 32, 40, 63
Rated current In in AC-7b / AC1 (A)	4, 5.5, 7, 8.5	8.5, 12, 15, 25
Rated power in AC3 (Kw)		
230 V	2-5	5-13
400 V	6-13	15-40
Control circuit voltage (V)	24, 230	
Mechanical life (times)	300,000	
Electrical life (times)		
AC-7a / AC1	10,000	80,000
AC-7b / AC1	50,000	40,000
Degree of protection	IP20, with connected conductors	
Conductor cross-sections		
Solid and stranded (mm^2)	2-25	
Finely stranded with end sleeve (mm^2)	2-25	
Terminals		
Terminal tightening torque (N·m)	0.8-2.4	
Ambient temperature (°C)	-5 ~ +40, max. 95 % humidity	
Storage temperature (°C)	-40 ~ +75	
Connection capacity (mm^2)	1-25	

Selection and ordering data

Width (mm)	Rated control power AC-7a 230 V (kW)	Rated control power AC-7b 230 V (kW)	Rated current In AC-7a (A)	Rated current In AC-7b (A)	Control voltage 50 Hz (V)	Type of contact	Type code
18	2	0.75	10	4	24	1NO+1NC	VCH5102-10-11-B5
						2NO	VCH5102-10-20-B5
					110	1NO+1NC	VCH5102-10-11-F5
						2NO	VCH5102-10-20-F5
					230	1NO+1NC	VCH5102-10-11-P5
						2NO	VCH5102-10-20-P5
	3.2	1.0	16	5.5	24	1NO+1NC	VCH5102-16-11-B5
						2NO	VCH5102-16-20-B5
					110	1NO+1NC	VCH5102-16-11-F5
						2NO	VCH5102-16-20-F5
					230	1NO+1NC	VCH5102-16-11-P5
						2NO	VCH5102-16-20-P5
	4	1.2	20	7	24	1NO+1NC	VCH5102-20-11-B5
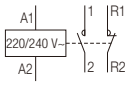						2NO	VCH5102-20-20-B5
					110	1NO+1NC	VCH5102-20-11-F5
						2NO	VCH5102-20-20-F5
					230	1NO+1NC	VCH5102-20-11-P5
						2NO	VCH5102-20-20-P5
	5	1.4	25	8.5	24	1NO+1NC	VCH5102-25-11-B5
						2NO	VCH5102-25-20-B5
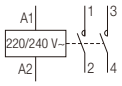					110	1NO+1NC	VCH5102-25-11-F5
						2NO	VCH5102-25-20-F5
					230	1NO+1NC	VCH5102-25-11-P5
						2NO	VCH5102-25-20-P5

3

Selection and ordering data

Width (mm)	Rated control power AC-7a 230 V (kW)	Rated control power AC-7b 230 V (kW)	Rated current In AC-7a (A)	Rated current In AC-7b (A)	Control voltage 50 Hz (V)	Type of contact	Type code
36	6.2	2.2	10	4	24	2NO+2NC	VCH5102-10-22-B5
						3NO+1NC	VCH5102-10-31-B5
						4NO	VCH5102-10-40-B5
						4NC	VCH5102-10-04-B5
					110	2NO+2NC	VCH5102-10-22-F5
						3NO+1NC	VCH5102-10-31-F5
						4NO	VCH5102-10-40-F5
						4NC	VCH5102-10-04-F5
					230	2NO+2NC	VCH5102-10-22-P5
						3NO+1NC	VCH5102-10-31-P5
						4NO	VCH5102-10-40-P5
						4NC	VCH5102-10-04-P5
	10	3	16	5.5	24	2NO+2NC	VCH5102-16-22-B5
						3NO+1NC	VCH5102-16-31-B5
						4NO	VCH5102-16-40-B5
						4NC	VCH5102-16-04-B5
					110	2NO+2NC	VCH5102-16-22-F5
						3NO+1NC	VCH5102-16-31-F5
						4NO	VCH5102-16-40-F5
						4NC	VCH5102-16-04-F5
					230	2NO+2NC	VCH5102-16-22-P5
						3NO+1NC	VCH5102-16-31-P5
						4NO	VCH5102-16-40-P5
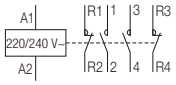						4NC	VCH5102-16-04-P5
	13	3.5	20	7	24	2NO+2NC	VCH5102-20-22-B5
						3NO+1NC	VCH5102-20-31-B5
						4NO	VCH5102-20-40-B5
						4NC	VCH5102-20-04-B5
					110	2NO+2NC	VCH5102-20-22-F5
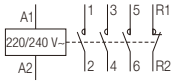						3NO+1NC	VCH5102-20-31-F5
						4NO	VCH5102-20-40-F5
						4NC	VCH5102-20-04-F5
					230	2NO+2NC	VCH5102-20-22-P5
						3NO+1NC	VCH5102-20-31-P5
						4NO	VCH5102-20-40-P5
						4NC	VCH5102-20-04-P5
	15	4	25	8.5	24	2NO+2NC	VCH5102-25-22-B5
						3NO+1NC	VCH5102-25-31-B5
						4NO	VCH5102-25-40-B5
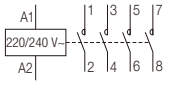						4NC	VCH5102-25-04-B5
					110	2NO+2NC	VCH5102-25-22-F5
						3NO+1NC	VCH5102-25-31-F5
						4NO	VCH5102-25-40-F5
						4NC	VCH5102-25-04-F5
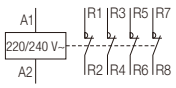					230	2NO+2NC	VCH5102-25-22-P5
						3NO+1NC	VCH5102-25-31-P5
						4NO	VCH5102-25-40-P5
						4NC	VCH5102-25-04-P5

Selection and ordering data

Width (mm)	Rated control power AC-7a 230 V (kW)	Rated control power AC-7b 230 V (kW)	Rated current In AC-7a (A)	Rated current In AC-7b (A)	Control voltage 50 Hz (V)	Type of contact	Type code
36	5	1.4	25	8.5	24	1NO+1NC	VCH5106-25-11-B5
						2NO	VCH5106-25-20-B5
						2NC	VCH5106-25-02-B5
					110	1NO+1NC	VCH5106-25-11-F5
						2NO	VCH5106-25-20-F5
						2NC	VCH5106-25-02-F5
					230	1NO+1NC	VCH5106-25-11-P5
						2NO	VCH5106-25-20-P5
						2NC	VCH5106-25-02-P5
	6.5	2	32	12	24	1NO+1NC	VCH5106-32-11-B5
						2NO	VCH5106-32-20-B5
						2NC	VCH5106-32-02-B5
					110	1NO+1NC	VCH5106-32-11-F5
						2NO	VCH5106-32-20-F5
						2NC	VCH5106-32-02-F5
					230	1NO+1NC	VCH5106-32-11-P5
						2NO	VCH5106-32-20-P5
						2NC	VCH5106-32-02-P5
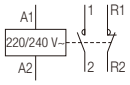	8.5	2.5	40	15	24	1NO+1NC	VCH5106-40-11-B5
						2NO	VCH5106-40-20-B5
						2NC	VCH5106-40-02-B5
					110	1NO+1NC	VCH5106-40-11-F5
						2NO	VCH5106-40-20-F5
						2NC	VCH5106-40-02-F5
					230	1NO+1NC	VCH5106-40-11-P5
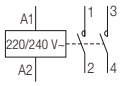						2NO	VCH5106-40-20-P5
						2NC	VCH5106-40-02-P5
	13	4	63	25	24	1NO+1NC	VCH5106-63-11-B5
						2NO	VCH5106-63-20-B5
						2NC	VCH5106-63-02-B5
					110	1NO+1NC	VCH5106-63-11-F5
						2NO	VCH5106-63-20-F5
						2NC	VCH5106-63-02-F5
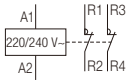					230	1NO+1NC	VCH5106-63-11-P5
						2NO	VCH5106-63-20-P5
						2NC	VCH5106-63-02-P5

Series VCH5106, 4-pole, up to 63 A

Selection and ordering data

Width (mm)	Rated control power AC-7a 230 V (kW)	Rated control power AC-7b 230 V (kW)	Rated current In AC-7a (A)	Rated current In AC-7b (A)	Control voltage 50 Hz (V)	Type of contact	Type code
54	15	4	25	8.5	24	2NO+2NC	VCH5106-25-22-B5
						3NO+1NC	VCH5106-25-31-B5
						4NO	VCH5106-25-40-B5
						4NC	VCH5106-25-04-B5
					110	2NO+2NC	VCH5106-25-22-F5
						3NO+1NC	VCH5106-25-31-F5
						4NO	VCH5106-25-40-F5
						4NC	VCH5106-25-04-F5
					230	2NO+2NC	VCH5106-25-22-P5
						3NO+1NC	VCH5106-25-31-P5
						4NO	VCH5106-25-40-P5
						4NC	VCH5106-25-04-P5
	21	6.5	32	12	24	2NO+2NC	VCH5106-32-22-B5
						3NO+1NC	VCH5106-32-31-B5
						4NO	VCH5106-32-40-B5
						4NC	VCH5106-32-04-B5
					110	2NO+2NC	VCH5106-32-22-F5
						3NO+1NC	VCH5106-32-31-F5
						4NO	VCH5106-32-40-F5
						4NC	VCH5106-32-04-F5
					230	2NO+2NC	VCH5106-32-22-P5
						3NO+1NC	VCH5106-32-31-P5
						4NO	VCH5106-32-40-P5
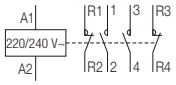						4NC	VCH5106-32-04-P5
	26	7.5	40	15	24	2NO+2NC	VCH5106-40-22-B5
						3NO+1NC	VCH5106-40-31-B5
						4NO	VCH5106-40-40-B5
						4NC	VCH5106-40-04-B5
					110	2NO+2NC	VCH5106-40-22-F5
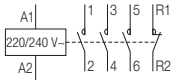						3NO+1NC	VCH5106-40-31-F5
						4NO	VCH5106-40-40-F5
						4NC	VCH5106-40-04-F5
					230	2NO+2NC	VCH5106-40-22-P5
						3NO+1NC	VCH5106-40-31-P5
						4NO	VCH5106-40-40-P5
						4NC	VCH5106-40-04-P5
	40	13	63	25	24	2NO+2NC	VCH5106-63-22-B5
						3NO+1NC	VCH5106-63-31-B5
						4NO	VCH5106-63-40-B5
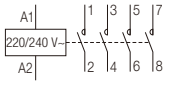						4NC	VCH5106-63-04-B5
					110	2NO+2NC	VCH5106-63-22-F5
						3NO+1NC	VCH5106-63-31-F5
						4NO	VCH5106-63-40-F5
						4NC	VCH5106-63-04-F5
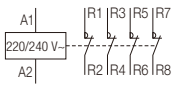					230	2NO+2NC	VCH5106-63-22-P5
						3NO+1NC	VCH5106-63-31-P5
						4NO	VCH5106-63-40-P5
						4NC	VCH5106-63-04-P5

Outline and installation dimensions

unit in mm

VCH5102 2P

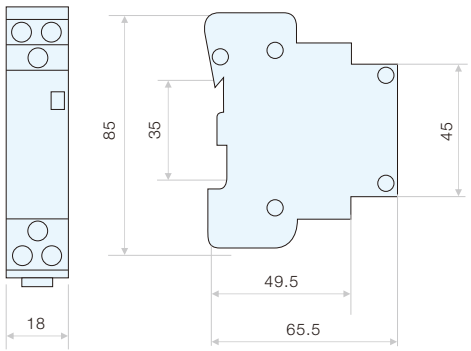

VCH5102 4P

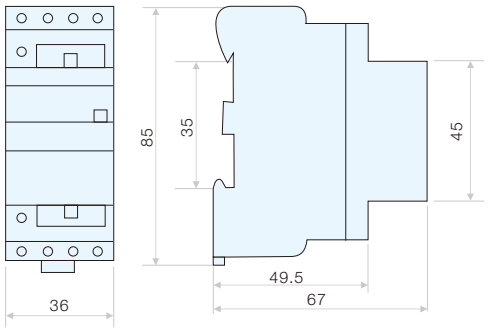

VCH5106 2P

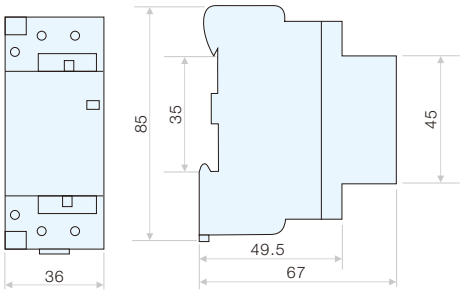

VCH5106 4P

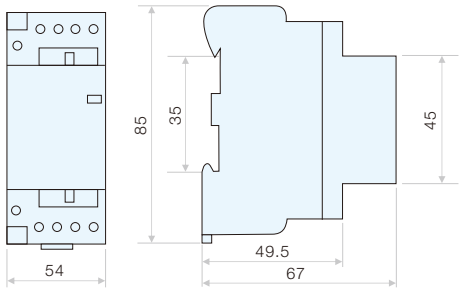

Distribution Boxes
Series VD51MS

Functions

VD51MS series distribution box are fit for AC 50/60 Hz, rated voltage 400 V, rated current to 100 A in the home and similar field circuit, for the redistribution of electrical energy, offering overload and short-circuit protection through the switch.



Technical specifications

- Standard: IEC/EN 61439-3
- The base, top and buckle cover are made of metal alloy.
- Rated operaional voltage Un (Ue) (V): 220/400
- Rated operaional current In (Ie) (A): 100, 80, 63 and below
- Rated impulse withstand voltage Uimp (kA): 6
- Mounting type: surface
- Degree of protection: IP 2XC

Selection and ordering data

Rated current In (A)	Color of base	Color of door	Number of module	Type code
100	Grey	Grey	4	VD51MS04
			8	VD51MS08
			12	VD51MS12
			16	VD51MS16
			18	VD51MS18
			22	VD51MS22

Outline and installation dimensions

unit in mm

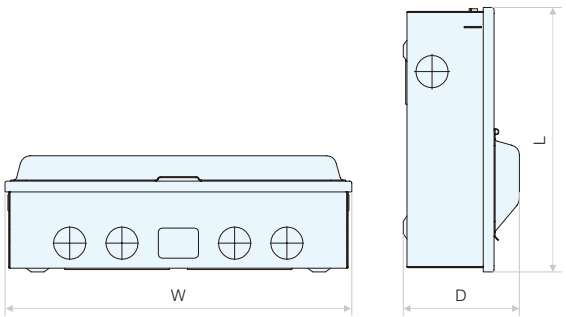

Type	L (mm)	W (mm)	D (mm)
VD51MS04	235	128	105
VD51MS08	264	202	115.3
VD51MS12	264	273	115.3
VD51MS16	264	345	115.3
VD51MS18	264	380	115.3
VD51MS22	264	454	115.3

Applications and functions for AC contactor

- Used for controlling 3-phase motors and generally for controlling power circuits.
- Used for many other applications such as isolation, capacitor switching and lighting.





Technical specifications

Type		VC51K-0610, VC51K-0601, VC51K-06004, VC51K-06008	VC51K-0910, VC51K-0901, VC51K-09004, VC51K-09008	VC51K-1210, VC51K-1201, VC51K-12004, VC51K-12008
Standard		IEC 60947-4-1		
Number of contacts		3NO+1NO, 3NO+1NC, 4NO, 2NO+2NC		
Rated conventional thermal current Ith (A)	AC-1	20		
Rated operational voltage Ue (V)		690		
Rated insulation voltage Ui (V)		690		
Rated impulse withstand voltage Uimp (kV)		6		
Rated frequency (Hz)		50/60		
Rated operational current (A)	AC-3 380/400 V	6	9	12
	AC-4 380/400 V	2.6	3.5	5
Number of poles		3,4	3,4	3,4
Rated operational power	220/230/240 V	1.5	2.2	3
in category AC-3 (KW)	380/400 V	2.2	4	5.5
	660/690 V	3	4	5.5
Rated making capacity (A)		110	110	114
Rated breaking capacity (A)	380 V	100	100	100
	690 V	70	70	70
Short-circuit protection (A)	gG fuse U ≤ 440 V	25		
Average impedance per pole (mW)		3		
Add-on auxiliary contact blocks	Front	VC51K-A1		
	Side	-		
	Front time delay	-		
	Front dust and damp protected	-		
Reversing contactor type		VC51KN		
Associated thermal overload relays	3 Pins/5 Pins	VTR51K		
Operation cycles(times/hour)	Electrical AC-3	1200		
	Electrical AC-4	300		
	Mechanical	3600		
Electrical life (X 10^4 times)	AC-3	100	120	
	AC-4	20		
Mechanical life (X 10^4 times)		1000		
Matching fuse model		RT16-16	RT16-20	
Tightening torque (N·m)		0.8		
Connection				
Screw clamp terminals	solid conductor (mm^2)	Max. 1x4+1x2.5		
	Flexible conductor without cable end (mm^2)	Max. 2x2.5		
	Flexible conductor with cable end (mm^2)	Max. 1X1.5+1X2.5		
Degree of protection		IP20		
Ambient air temperature (°C)		-5 to +40, max. 95 % humidity		
Storage temperature (°C)		-40 ~ +75		
Maximum operating altitude (meters)		2000		
Flame resistance	Conforming to UL 94	V1		

Technical specifications for auxiliary contact incorporated in the contactor type VC51K

- Standard: IEC 60947-5-1
- Number of auxiliary contact: 2, 4
- Mounting type: Front
- Conventional heating current (A): 10
- Rated operational voltage Ue (V): Up to 690
- Rated insulation voltage Ui (V): 690
- Conventional thermal current Ith (A): 10
- Minimum switching capacity Im (mA): 5
- Short circuit protection (A): 10
- Rated making capacity (A): 110

Coil voltage of contactor VC51K

Coil voltage Us (V)	12	20	24	32	36	42	48	60	100	110	115	120	127	208	220	230	240	265	380	400	415	440	480	500	550	600	550/600 600/660	660/690
50 Hz	J5	-	B5	C5	-	D5	E5	-	-	F5	FE5	G5	FC5	LE5	M5	P5	U5	-	Q5	V5	N5	R5	T5	S5	SC5	X5	-	Y5
60 Hz	-	-	B6	-	-	-	E6	-	-	F6	-	-	-	-	M6	-	U6	-	Q6	-	-	R6	-	-	-	-	-	Y6
50/60 Hz	J7	Z7	B7	C7	CC7	D7	E7	EE7	K7	F7	FE7	-	FC7	-	M7	P7	U7	W7	Q7	V7	N7	R7	-	S7	-	-	X7	Y7

Selection and ordering data

Mini contactors VC51K , 3-pole

	Rated operational power AC-3 380/400 V (kW)	380/400 V (kW)	660/690 V (kW)	Rated operational current AC-3 380/400 V (A)	Main contact		Rated control circuit voltage V 50 Hz	Auxiliary contact		Type code
	1.5	2.2	3	6	3	0	24	1	0	VC51K-0610-B5
								0	1	VC51K-0601-B5
							110	1	0	VC51K-0610-F5
								0	1	VC51K-0601-F5
							230	1	0	VC51K-0610-P5
								0	1	VC51K-0601-P5
	2.2	4	4	9	3	0	24	1	0	VC51K-0910-B5
								0	1	VC51K-0901-B5
							110	1	0	VC51K-0910-F5
								0	1	VC51K-0901-F5
							230	1	0	VC51K-0910-P5
								0	1	VC51K-0901-P5
	3	5.5	5.5	12	3	0	24	1	0	VC51K-1210-B5
								0	1	VC51K-1201-B5
							110	1	0	VC51K-1210-F5
								0	1	VC51K-1201-F5
							230	1	0	VC51K-1210-P5
								0	1	VC51K-1201-P5

Selection and ordering data

Mini contactors VC51K, 4-pole

Rated operational power AC-3 220/230 V (kW)	380/400 V (kW)	660/690 V (kW)	Rated operational current AC-3 380/400 V (A)	Main contact		Rated control circuit voltage V 50 Hz	Auxiliary contact		Type code
1.5	2.2	3	6	4	0	24	0	0	VC51K-06004-B5
						110	0	0	VC51K-06004-F5
						230	0	0	VC51K-06004-P5
				2	2	24	0	0	VC51K-06008-B5
						110	0	0	VC51K-06008-F5
						230	0	0	VC51K-06008-P5
2.2	4	4	9	4	0	24	0	0	VC51K-09004-B5
						110	0	0	VC51K-09004-F5
						230	0	0	VC51K-09004-P5
				2	2	24	0	0	VC51K-09008-B5
						110	0	0	VC51K-09008-F5
						230	0	0	VC51K-09008-P5
3	5.5	5.5	12	4	0	24	0	0	VC51K-12004-B5
						110	0	0	VC51K-12004-F5
						230	0	0	VC51K-12004-P5
				2	2	24	0	0	VC51K-12008-B5
						110	0	0	VC51K-12008-F5
						230	0	0	VC51K-12008-P5

Mini reversing contactors VC51KN, 3-pole

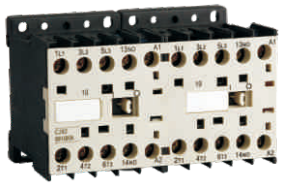

Rated operational power AC-3 380/400 V (kW)	380/400 V (kW)	660/690 V (kW)	Rated operational current AC-3 380/400 V (A)	Main contact		Rated control circuit voltage V 50 Hz	Auxiliary contact		Type code
1.5	2.2	3	6	3	0	24	1	0	VC51KN-0610-B5
							0	1	VC51KN-0601-B5
						110	1	0	VC51KN-0610-F5
							0	1	VC51KN-0601-F5
						230	1	0	VC51KN-0610-P5
							0	1	VC51KN-0601-P5
2.2	4	4	9	3	0	24	1	0	VC51KN-0910-B5
							0	1	VC51KN-0901-B5
						110	1	0	VC51KN-0910-F5
							0	1	VC51KN-0901-F5
						230	1	0	VC51KN-0910-P5
							0	1	VC51KN-0901-P5
3	5.5	5.5	12	3	0	24	1	0	VC51KN-1210-B5
							0	1	VC51KN-1201-B5
						110	1	0	VC51KN-1210-F5
							0	1	VC51KN-1201-F5
						230	1	0	VC51KN-1210-P5
							0	1	VC51KN-1201-P5

Mini reversing contactors VC51KN, 4-pole

Rated operational power AC-3 220/230 V (kW)	380/400 V (kW)	660/690 V (kW)	Rated operational current AC-3 380/400 V (A)	Main contact		Rated control circuit voltage V 50 Hz	Auxiliary contact		Type code
1.5	2.2	3	6	4	0	24	0	0	VC51KN-06004-B5
						110	0	0	VC51KN-06004-F5
						230	0	0	VC51KN-06004-P5
2.2	4	4	9	4	0	24	0	0	VC51KN-09004-B5
						110	0	0	VC51KN-09004-F5
						230	0	0	VC51KN-09004-P5
3	5.5	5.5	12	4	0	24	0	0	VC51KN-12004-B5
						110	0	0	VC51KN-12004-F5
						230	0	0	VC51KN-12004-P5

Selection and ordering data

Front-mounted instantaneous auxiliary contact blocks

For contactors	Auxiliary contacts		Type code
	0	2	VC51K-A1-02
	1	1	VC51K-A1-11
	2	0	VC51K-A1-20
	0	4	VC51K-A1-04
	1	3	VC51K-A1-13
	2	2	VC51K-A1-22
	3	1	VC51K-A1-31
	4	0	VC51K-A1-40

Outline and installation dimensions

unit in mm

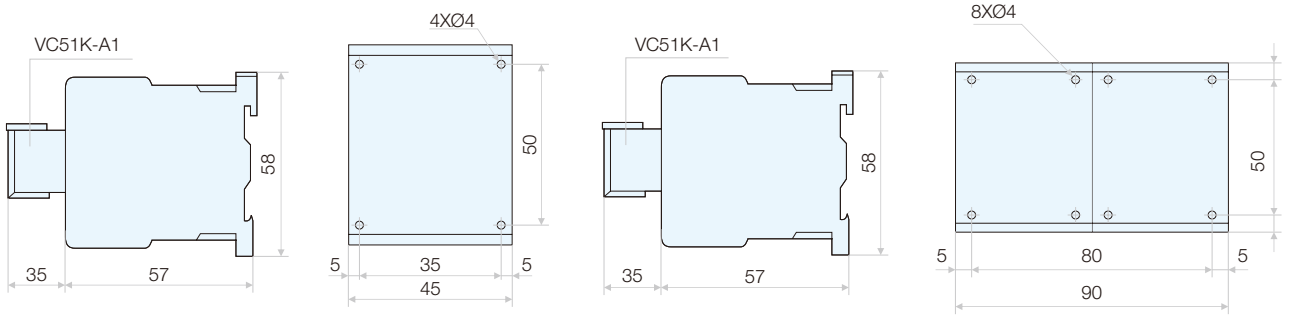

Applications and functions

- Used for controlling 3-phase motors and generally for controlling power circuits.
- Used for many other applications such as isolating, capacitor switching and lighting.



Technical specifications for type VC51

Type			VC51-09	VC51-12	VC51-18	VC51-25	VC51-32	VC51-40	VC51-50	VC51-65	VC51-80	VC51-95
Standard			IEC 60947-4-1									
Number of poles			3, 4	3, 4	3	3, 4	3	3, 4	3, 4	3, 4	3, 4	3, 4
Rated operational current Ie (A)	380 V	In AC-3	9	12	18	25	32	40	50	65	80	95
		In AC-4	3.5	5	7.7	8.5	12	18.5	24	28	37	44
	660 V	In AC-3	6.6	8.9	12	18	21	34	39	42	49	55
		In AC-4	1.5	2	3.8	4.4	7.5	9	12	14	17.3	21.3
	440 V	In AC-1	20	25	32	40	50	60	80	80	110	125
Rated operational voltage Ue (V)		Up to	690									
Frequency limits of the operational current (time/h)			25-400									
Rated conventional thermal current Ith (A)			25	25	32	40	50	60	80	80	125	125
Rated insulation voltage Ui (V)			690									
Rated impulse withstand voltage Uimp (kV)			8									
Rated frequency (Hz)			50/60									
Rated making capacity (A)	400 V		10 x Ie AC-3 or 12 x Ie AC-4									
Rated breaking capacity (A)	400 V		8 x I e AC-3 or 10 x Ie AC-4									
Rated operational power in category AC-3 (kw)	220/230/240 V		2.2	3	4	5.5	7.5	11	15	18.5	22	25
	380/400 V		4	5.5	7.5	11	15	18.5	22	30	37	45
	660/690 V		5.5	7.5	10	15	18.5	30	33	37	45	45
Fuse protection against short-circuit (A)	Without thermal overload relay, Gg fuse Type 1		20	25	32	40	50	63	80	80	125	160
	Type 2		20	20	25	32	40	50	63	80	150	150
	With thermal overload relay		see specification and ordering data of VTR51, for aM or gG fuse ratings corresponding to the associated thermal overload relay									
Average impedance per pole (mΩ)			2.5	2.5	2.5	2	2	1.5	1.5	1.5	0.8	0.8
Add-on auxiliary contact blocks	Front		VC51-A1 and VC51-A1D									
	Side		VC51-A1C									
	Front time delay		VC51-A2, VC51-A3									
	Front dust and damp protected		■									
Reversing contactor type			VC51DN									
Associated thermal overload relays			VTR51-25				VTR51-36	VTR51-93				
Operation cycles (times/hour)	Electrical AC-3		1200	1200	1200	1200	600	600	600	600	600	600
	Electrical AC-4		300	300	300	300	300	300	300	300	300	300
	Mechanical		3600	3600	3600	3600	3600	3600	3600	3600	3600	3600
Electrical life (X 10^3 times)	AC-3		1000	1000	1000	1000	800	800	600	600	600	600
	AC-4		200	200	200	200	200	150	150	150	100	100
Mechanical life (X 10^6 times)			10	10	10	10	8	8	8	8	6	6
Matching fuse model			RT16-20	RT16-20	RT16-32	RT16-40	RT16-50	RT16-63	RT16-80	RT16-80	RT16-100	RT16-125
Tightening torque (N · m) Connection			1.2	1.2	1.7	2.0	2.5	5	5	5	9	9
Cabling cross section (CU)	Flexible cable with cold-pressed 2 socket (mm^2)		1/2.5	1/2.5	1/4	1/4	1.5/4	2.5/10	2.5/10	2.5/10	4/16	4/16
	Flexible cable without cold-pressed 2 socket (mm^2)		1/4	1/4	1.5/6	1.5/6	2.5/10	2.5/16	2.5/16	2.5/16	4/25	4/25
	Inflexible 2 cable (mm^2)		1/4	1.5/4	1.5/6	1.5/6	1.5/10	2.5/25	2.5/25	2.5/25	4/50	4/50
Screw size			M3.5	M3.5	M3.5	M4	M4	M8	M8	M8	M10	M10
Degree of protection			IP20									
Ambient air temperature (°C)			-5 to +40, max. 95 % humidity									
Storage temperature (°C)			-40 ~ +75									
Maximum operating altitude (meters)			2000									
Flame resistance	Conforming to UL 94		V1									

Technical specifications for auxiliary contacts VC51-A1

- Standard: IEC 60947-5-1
- Number of auxiliary contacts: 2, 4
- Mounting type: Front, side
- Conventional heating current (A): 10
- Rated operational voltage Ue (V): Up to 690
- Rated insulation voltage Ui (V): 690
- Conventional thermal current Ith (A): 10
- Minimum switching capacity Imin (mA): 5
- Short circuit protection (A): gG fuse: 10 A
- Rated making capacity (A): 140

Technical specifications for time delay contact VC51-A2/A3

- Standard: IEC 60255-5
- Number of contacts: 2
- Mounting type: Front
- Delay time type making time delay, breaking time delay
- Timing ranges: 0.1-3, 0.1-30, 10-180
- Repeat accuracy: ± 3 % (10 ms minimum)
- Reset time
  - During time delay period (ms): 150
  - After time delay period (ms): 50
- Conventional heating current (A): 10
- Rated operational voltage Ue (V): Up to 690
- Rated insulation voltage Ui (V): 250
- Conventional thermal current Ith (A): 10

Voltage and frequency for coil VC51-D2/D4/D6

Coil voltage Us (V)	12	20	24	32	36	42	48	60	100	110	115	120	127	208	220	230	240	265	380	400	415	440	480	500	550	600	550/600 600/660	660/690
50 Hz	J5	-	B5	C5	-	D5	E5	-	-	F5	FE5	G5	FC5	LE5	M5	P5	U5	-	Q5	V5	N5	R5	T5	S5	SC5	X5	-	Y5
60 Hz	-	-	B6	-	-	-	E6	-	-	F6	-	-	-	-	M6	-	U6	-	Q6	-	-	R6	-	-	-	-	-	Y6
50/60 Hz	J7	Z7	B7	C7	CC7	D7	E7	EE7	K7	F7	FE7	-	FC7	-	M7	P7	U7	W7	Q7	V7	N7	R7	-	S7	-	-	X7	Y7

Technical specifications for coil VC51-D2/D4/D6

Suitable contactor			VC51-D2			VC51-D4		VC51-D6				
			VC51-09	VC51-12	VC51-18	VC51-25	VC51-32	VC51-40	VC51-50	VC51-65	VC51-80	VC51-95
Coil consumption	Pick-up (VA)		70	70	70	100	100	245	245	245	245	245
	Holding (VA)	50 Hz, 60 Hz	9.0	9.0	9.0	10	10	30	30	30	30	30
		50/60 Hz	10	10	10	11	11	32	32	32	32	32
	Power (W)		2~3.5	2~3.5	2~3.5	3~4	3~4	6~10	6~10	6~10	6~10	6~10

Selection and ordering data

AC contactors VC51, 3-pole

Rated operational power AC-3 220/230 V (kW)	380/400 V (kW)	660/690 V (kW)	Rated operational current AC-3 380/400 V (A)	Main contact		Rated control circuit voltage V 50 Hz	Auxiliary contact		Type code
2.2	4	5.5	9	3	0	24	1	0	VC51-0910-B5
							0	1	VC51-0901-B5
							1	1	VC51-0911-B5
						110	1	0	VC51-0910-F5
							0	1	VC51-0901-F5
							1	1	VC51-0911-F5
						230	1	0	VC51-0910-P5
							0	1	VC51-0901-P5
							1	1	VC51-0911-P5
3	5.5	7.5	12	3	0	24	1	0	VC51-1210-B5
							0	1	VC51-1201-B5
							1	1	VC51-1211-B5
						110	1	0	VC51-1210-F5
							0	1	VC51-1201-F5
							1	1	VC51-1211-F5
						230	1	0	VC51-1210-P5
							0	1	VC51-1201-P5
							1	1	VC51-1211-P5
4	7.5	10	18	3	0	24	1	0	VC51-1810-B5
							0	1	VC51-1801-B5
							1	1	VC51-1811-B5
						110	1	0	VC51-1810-F5
							0	1	VC51-1801-F5
							1	1	VC51-1811-F5
						230	1	0	VC51-1810-P5
							0	1	VC51-1801-P5
							1	1	VC51-1811-P5
5.5	11	15	25	3	0	24	1	0	VC51-2510-B5
							0	1	VC51-2501-B5
							1	1	VC51-2511-B5
						110	1	0	VC51-2510-F5
							0	1	VC51-2501-F5
							1	1	VC51-2511-F5
						230	1	0	VC51-2510-P5
							0	1	VC51-2501-P5
							1	1	VC51-2511-P5
7.5	15	18.5	32	3	0	24	1	0	VC51-3210-B5
							0	1	VC51-3201-B5
							1	1	VC51-3211-B5
						110	1	0	VC51-3210-F5
							0	1	VC51-3201-F5
							1	1	VC51-3211-F5
						230	1	0	VC51-3210-P5
							0	1	VC51-3201-P5
							1	1	VC51-3211-P5
11	18.5	30	40	3	0	24	1	1	VC51-4011-B5
						110	1	1	VC51-4011-F5
						230	1	1	VC51-4011-P5
15	22	33	50	3	0	24	1	1	VC51-5011-B5
						110	1	1	VC51-5011-F5
						230	1	1	VC51-5011-P5
18.5	30	37	65	3	0	24	1	1	VC51-6511-B5
						110	1	1	VC51-6511-F5
						230	1	1	VC51-6511-P5
22	37	45	80	3	0	24	1	1	VC51-8011-B5
						110	1	1	VC51-8011-F5
						230	1	1	VC51-8011-P5
25	45	45	95	3	0	24	1	1	VC51-9511-B5
						110	1	1	VC51-9511-F5
						230	1	1	VC51-9511-P5



Selection and ordering data

AC contactors VC51, 4-pole

Rated operational power AC-3 220/230 V (kW)	380/400 V (kW)	660/690 V (kW)	Rated operational current AC-3 380/400 V (A)	Main contact		Rated control circuit voltage V 50 Hz	Auxiliary contact		Type code
2.2	4	5.5	9	4	0	24	0	0	VC51-09004-B5
						110	0	0	VC51-09004-F5
						230	0	0	VC51-09004-P5
				2	2	24	0	0	VC51-09008-B5
						110	0	0	VC51-09008-F5
						230	0	0	VC51-09008-P5
3	5.5	7.5	12	4	0	24	0	0	VC51-12004-B5
						110	0	0	VC51-12004-F5
						230	0	0	VC51-12004-P5
				2	2	24	0	0	VC51-12008-B5
						110	0	0	VC51-12008-F5
						230	0	0	VC51-12008-P5
5.5	11	15	25	4	0	24	0	0	VC51-25004-B5
						110	0	0	VC51-25004-F5
						230	0	0	VC51-25004-P5
				2	2	24	0	0	VC51-25008-B5
						110	0	0	VC51-25008-F5
						230	0	0	VC51-25008-P5
11	18.5	30	40	4	0	24	0	0	VC51-40004-B5
						110	0	0	VC51-40004-F5
						230	0	0	VC51-40004-P5
				2	2	24	0	0	VC51-40008-B5
						110	0	0	VC51-40008-F5
						230	0	0	VC51-40008-P5
15	22	33	50	4	0	24	0	0	VC51-50004-B5
						110	0	0	VC51-50004-F5
						230	0	0	VC51-50004-P5
				2	2	24	0	0	VC51-50008-B5
						110	0	0	VC51-50008-F5
						230	0	0	VC51-50008-P5
18.5	30	37	65	4	0	24	0	0	VC51-65004-B5
						110	0	0	VC51-65004-F5
						230	0	0	VC51-65004-P5
				2	2	24	0	0	VC51-65008-B5
						110	0	0	VC51-65008-F5
						230	0	0	VC51-65008-P5
22	37	45	80	4	0	24	0	0	VC51-80004-B5
						110	0	0	VC51-80004-F5
						230	0	0	VC51-80004-P5
				2	2	24	0	0	VC51-80008-B5
						110	0	0	VC51-80008-F5
						230	0	0	VC51-80008-P5
25	45	45	95	4	0	24	0	0	VC51-95004-B5
						110	0	0	VC51-95004-F5
						230	0	0	VC51-95004-P5
				2	2	24	0	0	VC51-95008-B5
						110	0	0	VC51-95008-F5
						230	0	0	VC51-95008-P5

Selection and ordering data

Reversing contactors VC51DN

Rated operational power AC-3 220/230 V (kW)	Rated operational power AC-3 380/400 V (kW)	Rated operational power AC-3 660/690 V (kW)	Rated operational current AC-3 380/400 V (A)	Rated control circuit voltage V 50 Hz	Type code
2.2	4	5.5	9	24	VC51DN-09-B5
				110	VC51DN-09-F5
				230	VC51DN-09-P5
3	5.5	7.5	12	24	VC51DN-12-B5
				110	VC51DN-12-F5
				230	VC51DN-12-P5
4	7.5	10	18	24	VC51DN-18-B5
				110	VC51DN-18-F5
				230	VC51DN-18-P5
5.5	11	15	25	24	VC51DN-25-B5
				110	VC51DN-25-F5
				230	VC51DN-25-P5
7.5	15	18.5	32	24	VC51DN-32-B5
				110	VC51DN-32-F5
				230	VC51DN-32-P5
11	18.5	30	40	24	VC51DN-40-B5
				110	VC51DN-40-F5
				230	VC51DN-40-P5
15	22	33	50	24	VC51DN-50-B5
				110	VC51DN-50-F5
				230	VC51DN-50-P5
18.5	30	37	65	24	VC51DN-65-B5
				110	VC51DN-65-F5
				230	VC51DN-65-P5
22	37	45	80	24	VC51DN-80-B5
				110	VC51DN-80-F5
				230	VC51DN-80-P5
25	45	45	95	24	VC51DN-95-B5
				110	VC51DN-95-F5
				230	VC51DN-95-P5

Accessories for VC51

Selection and ordering data

Instantaneous auxiliary contact blocks

	Type	Auxiliary contact		Type code
	Side-mounted			
	VC51-A1C	1	1	VC51-A1C-11
	Front-mounted			
	VC51-A1D	0	1	VC51-A1D-01
		1	0	VC51-A1D-10
	VC51-A1	0	2	VC51-A1-02
		1	1	VC51-A1-11
		2	0	VC51-A1-20
		0	4	VC51-A1-04
		1	3	VC51-A1-13
		2	2	VC51-A1-22
		3	1	VC51-A1-31
		4	0	VC51-A1-40

Time-delay auxiliary contact blocks

	Type	Auxiliary contact		Time-delay setting range		Type code
				Type	Setting range	
	VC51-A2	1	1	On-delay	0.1 … 3 s	VC51-A2-T0
					0.1 … 30 s	VC51-A2-T2
					10 … 180 s	VC51-A2-T4
	VC51-A3	1	1	Off-delay	0.1 … 3 s	VC51-A3-T0
					0.1 … 30 s	VC51-A3-T2
					10 … 180 s	VC51-A3-T4

Coils

	Size	For cotactors	Rated control circuit voltage V 50 Hz	Type code
	D2	VC51 09 … 18	24	VC51-D2-B5
			110	VC51-D2-F5
			230	VC51-D2-P5
	D4	VC51 25 … 32	24	VC51-D4-B5
			110	VC51-D4-F5
			230	VC51-D4-P5
	D6	VC51 40 … 95	24	VC51-D6-B5
			110	VC51-D6-F5
			230	VC51-D6-P5

Mechanica interlock for inversing contactors

	Type	For cotactors	Type code
	VC51-A4	VC51 09...32	VC51-A4X
		VC51 40...95	VC51-A4D

Electrical life curve for AC contactor VC51

For breaking control when AC-3 type work. (Ue ≤ 440 V)
The breaking current is equal to rated making current.

Notes:
Asynchronous, P = 5.5 kW,
Ue = 400 V, Ie = 11 A, Ic = Ie = 11 A
motor or asynchronous, P = 5.5 kW,
Ue = 415 V, Ie = 11 A, Ic = Ie = 11 A
For 30 million electrical life.

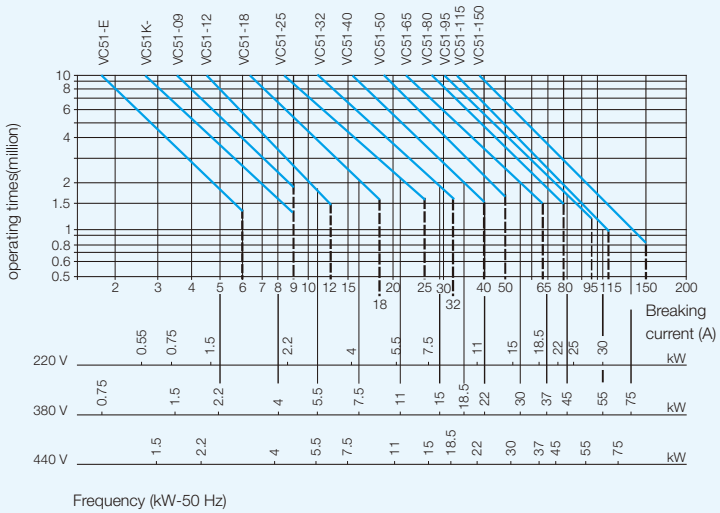

Outline and installation dimensions

unit in mm

VC51-09...32

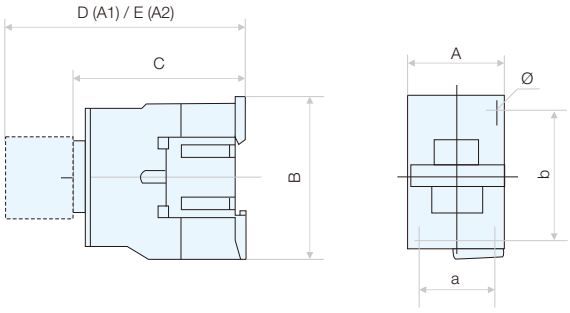

VC51-40...95

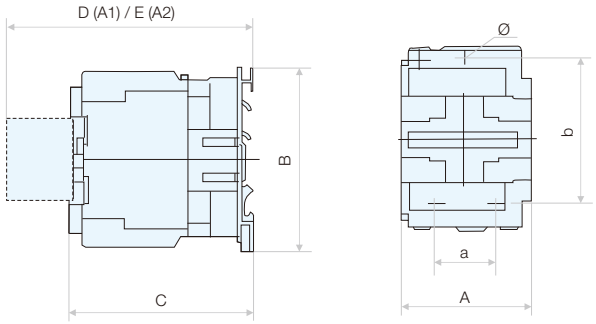

Type		A max	B max	C max	D max	E max	a	b	Ø
3	VC51-09...12	47	76	82	113	133	34/35	50/60	2-Ø4.5
	VC51-18	47	76	87	118	138	34/35	50/60	2-Ø4.5
	VC51-25	57	86	95	126	146	40	48	2-Ø4.5
	VC51-32	57	86	100	131	151	40	48	2-Ø4.5
	VC51-40...65	77	129	116	145	165	40	100/110	3-Ø6.5
	VC51-80...95	87	129	127	156	176	40	100/110	3-Ø6.5
4	VC51-09...12	47	76	82	113	133	34/35	50/60	2-Ø4.5
	VC51-25	57	86	95	126	146	40	48	2-Ø4.5
	VC51-40...65	86	129	116 (129)	145	165	40	100/110	3-Ø6.5
	VC51-80...95	97	129	127 (140)	156	176	40	100/110	3-Ø6.5

Notes: The dimensions in brackets are for 008 (4P) type

Contactors
Series VC51F

Applications and functions

- Used for controlling 3-phase motors and generally for controlling power circuits.
- Used for many other applications such as isolation, capacitor switching and lighting.



3

Technical specifications for contactor VC51F

Model		VC51F-115	VC51F-150	VC51F-185	VC51F-225	VC51F-265	VC51F-330	VC51F-400	VC51F-500	VC51F-630	VC51F-780
Standard		IEC 60947-4-1									
Number of poles		3, 4	3, 4	3, 4	3, 4	3	3	3, 4	3, 4	3, 4	3, 4
Rated operational current Ie (A)	In AC-3	115	150	185	225	265	330	400	500	630	780
	In AC-1	200	250	275	315	350	400	500	700	1000	1600
Rated operational voltage Ue (V)	Up to	1000									
Frequency limits of the operational current (time/h)		16-200									
Rated conventional thermal current Ith (A)		200	250	275	315	350	400	500	700	1000	1600
Rated insulation voltage Ui (V)		1000									
Rated impulse withstand voltage Uimp (kV)		8									
Rated frequency (Hz)		50/60									
Rated making capacity (A)		10 x In AC-3 or 12 x In AC-4									
Rated breaking capacity (A)	400 V	8 x In AC-3 or 10 x In AC-4									
Rated operational power in category AC-3 (kw)	220/230/240 V	30	40	55	68	75	100	129	147	200	220
	380/400 V	55	75	90	100	132	160	200	250	335	400
	660/690 V	80	100	120	129	180	220	280	355	450	475
Short-circuit protection by fuse (A)	Motor circuit (type aM)	125	160	200	250	315	400	400	500	630	-
	With thermal overload relay (type gG)	200	200	315	315	500	500	630	800	800	-
	gG fuses	200	250	315	315	400	500	500	800	1000	
Average impedance per pole (mW)		0.37	0.35	0.33	0.32	0.3	0.28	0.26	0.18	0.12	0.1
Add-on auxiliary contact blocks	Front	identical to those used on VC51 contactors									
	Side	-									
	Front time delay	identical to those used on VC51 contactors									
	Front dust and damp protected	-									
Reversing contactor type		VC51FN									
Associated thermal overload relays		VTR51F-53					VTR51F-73				
Operation cycles (times/hour)	In AC-3	1200	1200	600	600	600	600	600	600	600	600
Electrical life (X 10^6 times)		1.2	1.2	1	1	0.8	0.8	0.8	0.8	0.8	0.8
Mechanical life (X 10^6 times)		10	10	6	6	6	6	6	6	6	6
Matching fuse model		RT16-1	RT16-1	RT16-2	RT16-2	RT16-2	RT16-3	RT16-3	RT16-4	RT16-4	RT16-4
Tightening torque (N·m) Connection		0.8	0.8	0.8	1.2	1.2	1.2	1.2	1.2	4	4
Cabling cross section CU (mm^2)		95	120	150	185	240	240	2 x 150	2 x 240	240	300
Screw size		M6	M8	M8	M10	M10	M10	M10	M12	M12	M4
Degree of protection		IP20									
Ambient air temperature (°C)		-5 to +40, max. 95 % humidity									
Storage temperature (°C)		-40 ~ +70									
Maximum operating altitude (meters)		2000									
Flame resistance	Conforming to UL 94	V1									

Selection and ordering data

AC contactors VC51F

	Rated operational power AC-3 220/230 V (kW)	380/400 V (kW)	660/690 V (kW)	Rated operational current AC-3 380/400 V (A)	Rated control circuit voltage V 50 Hz	Type code
VC51F, 3-pole, 55 to 400 kW	30	55	59	115	24	VC51F-115-3-B5
					110	VC51F-115-3-F5
					230	VC51F-115-3-P5
	40	75	80	150	24	VC51F-150-3-B5
					110	VC51F-150-3-F5
					230	VC51F-150-3-P5
	55	90	100	185	24	VC51F-185-3-B5
					110	VC51F-185-3-F5
					230	VC51F-185-3-P5
	63	110	110	225	24	VC51F-225-3-B5
					110	VC51F-225-3-F5
					230	VC51F-225-3-P5
	75	132	140	265	24	VC51F-265-3-B5
					110	VC51F-265-3-F5
					230	VC51F-265-3-P5
	100	165	180	330	24	VC51F-330-3-B5
					110	VC51F-330-3-F5
					230	VC51F-330-3-P5
	115	200	220	400	24	VC51F-400-3-B5
					110	VC51F-400-3-F5
					230	VC51F-400-3-P5
	147	250	280	500	24	VC51F-500-3-B5
					110	VC51F-500-3-F5
					230	VC51F-500-3-P5
	200	335	375	630	24	VC51F-630-3-B5
					110	VC51F-630-3-F5
					230	VC51F-630-3-P5
	200	400	425	780	24	VC51F-780-3-B5
					110	VC51F-780-3-F5
					230	VC51F-780-3-P5
VC51F, 4-pole, 55 to 400 kW	30	55	59	115	24	VC51F-115-4-B5
					110	VC51F-115-4-F5
					230	VC51F-115-4-P5
	40	75	80	150	24	VC51F-150-4-B5
					110	VC51F-150-4-F5
					230	VC51F-150-4-P5
	55	90	100	185	24	VC51F-185-4-B5
					110	VC51F-185-4-F5
					230	VC51F-185-4-P5
	63	110	110	225	24	VC51F-225-4-B5
					110	VC51F-225-4-F5
					230	VC51F-225-4-P5
	75	132	140	265	24	VC51F-265-4-B5
					110	VC51F-265-4-F5
					230	VC51F-265-4-P5
	100	165	180	330	24	VC51F-330-4-B5
					110	VC51F-330-4-F5
					230	VC51F-330-4-P5
	115	200	220	400	24	VC51F-400-4-B5
					110	VC51F-400-4-F5
					230	VC51F-400-4-P5
	147	250	280	500	24	VC51F-500-4-B5
					110	VC51F-500-4-F5
					230	VC51F-500-4-P5
	200	335	375	630	24	VC51F-630-4-B5
					110	VC51F-630-4-F5
					230	VC51F-630-4-P5
	200	400	425	780	24	VC51F-780-4-B5
					110	VC51F-780-4-F5
					230	VC51F-780-4-P5

Selection and ordering data

Reversing contactors VC51FN

	Rated operational power AC-3 220/230 V (kW)	380/400 V (kW)	660/690 V (kW)	Rated operational current AC-3 380/400 V (A)	Rated control circuit voltage V 50 Hz	Type code
3-pole, 55 to 400 kW	30	55	59	115	24	VC51FN-115-3-B5
					110	VC51FN-115-3-F5
					230	VC51FN-115-3-P5
	40	75	80	150	24	VC51FN-150-3-B5
					110	VC51FN-150-3-F5
					230	VC51FN-150-3-P5
	55	90	100	185	24	VC51FN-185-3-B5
					110	VC51FN-185-3-F5
					230	VC51FN-185-3-P5
	63	110	110	225	24	VC51FN-225-3-B5
					110	VC51FN-225-3-F5
					230	VC51FN-225-3-P5
	75	132	140	265	24	VC51FN-265-3-B5
					110	VC51FN-265-3-F5
					230	VC51FN-265-3-P5
	100	165	180	330	24	VC51FN-330-3-B5
					110	VC51FN-330-3-F5
					230	VC51FN-330-3-P5
	115	200	220	400	24	VC51FN-400-3-B5
					110	VC51FN-400-3-F5
					230	VC51FN-400-3-P5
	147	250	280	500	24	VC51FN-500-3-B5
					110	VC51FN-500-3-F5
					230	VC51FN-500-3-P5
	200	335	375	630	24	VC51FN-630-3-B5
					110	VC51FN-630-3-F5
					230	VC51FN-630-3-P5
	200	400	425	780	24	VC51FN-780-3-B5
					110	VC51FN-780-3-F5
					230	VC51FN-780-3-P5
4-pole, 55 to 400 kW	30	55	59	115	24	VC51FN-115-4-B5
					110	VC51FN-115-4-F5
					230	VC51FN-115-4-P5
	40	75	80	150	24	VC51FN-150-4-B5
					110	VC51FN-150-4-F5
					230	VC51FN-150-4-P5
	55	90	100	185	24	VC51FN-185-4-B5
					110	VC51FN-185-4-F5
					230	VC51FN-185-4-P5
	63	110	110	225	24	VC51FN-225-4-B5
					110	VC51FN-225-4-F5
					230	VC51FN-225-4-P5
	75	132	140	265	24	VC51FN-265-4-B5
					110	VC51FN-265-4-F5
					230	VC51FN-265-4-P5
	100	165	180	330	24	VC51FN-330-4-B5
					110	VC51FN-330-4-F5
					230	VC51FN-330-4-P5
	115	200	220	400	24	VC51FN-400-4-B5
					110	VC51FN-400-4-F5
					230	VC51FN-400-4-P5
	147	250	280	500	24	VC51FN-500-4-B5
					110	VC51FN-500-4-F5
					230	VC51FN-500-4-P5
	200	335	375	630	24	VC51FN-630-4-B5
					110	VC51FN-630-4-F5
					230	VC51FN-630-4-P5
	200	400	425	780	24	VC51FN-780-4-B5
					110	VC51FN-780-4-F5
					230	VC51FN-780-4-P5

Selection and ordering data

Coils

	Size	For cotactors	Rated control circuit voltage V 50 Hz	Type code
	FF	VC51F 115 ... 150	24	VC51F-FF-B5
			110	VC51F-FF-F5
			230	VC51F-FF-P5
	FG	VC51F 185 ... 225	24	VC51F-FG-B5
			110	VC51F-FG-F5
			230	VC51F-FG-P5
	FH	VC51F 265 ... 330	24	VC51F-FH-B5
			110	VC51F-FH-F5
			230	VC51F-FH-P5
	FJ	VC51F 400	24	VC51F-FJ-B5
			110	VC51F-FJ-F5
			230	VC51F-FJ-P5
	FK	VC51F 500	24	VC51F-FK-B5
			110	VC51F-FK-F5
			230	VC51F-FK-P5
	FL	VC51F 630	24	VC51F-FL-B5
			110	VC51F-FL-F5
			230	VC51F-FL-P5
	FX	VC51F 780	24	VC51F-FX-B5
			110	VC51F-FX-F5
			230	VC51F-FX-P5

3

Outline and installation dimensions

unit in mm

VC51F-115...330

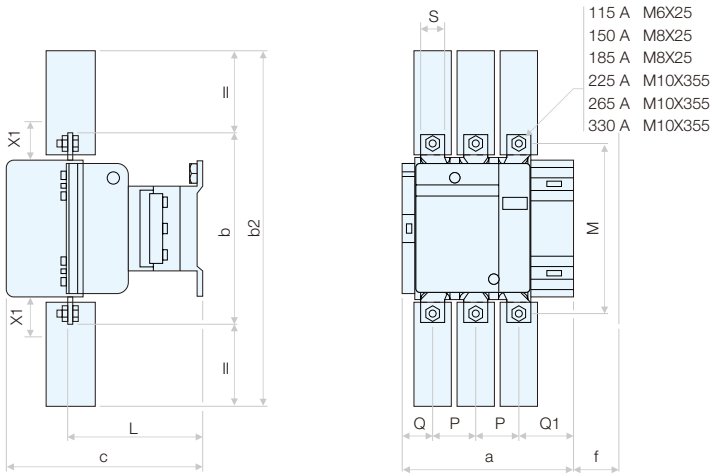

VC51F		a	b	b1	b2	c	f	G	G1	J	J1	L	M	P	Q	Q1	S	1	Y	Z
115	3P	163.5	162	137	265	171	131	106	80	106	120	107	147	37	29.5	60	20	26	44	13.5
	4P	200.5	162	137	265	171	131	143	80	106	120	107	147	37	29.5	60	20	26	44	13.5
150	3P	163.5	170	137	301	171	131	106	80	106	120	107	150	40	26	57.5	20	34	44	13.5
	4P	200.5	170	137	301	171	131	143	80	106	120	107	150	40	26	55.5	20	34	44	13.5
185	3P	168.5	174	137	305	181	130	111	80	106	120	113.5	154	40	29	59.5	20	34	44	13.5
	4P	208.5	174	137	305	181	130	151	80	106	120	113.5	154	40	29	59.5	20	34	44	13.5
225	3P	168.5	197	137	364	181	130	111	80	106	120	113.5	172	48	21	51.5	25	44.5	44	13.5
	4P	208.5	197	137	364	181	130	151	80	106	120	113.5	172	48	17	47.5	25	44.5	44	13.5
265	3P	201.5	203	145	375	213	147	142	96	106	120	141	178	48	39	66.5	25	44.5	38	21.5
	4P	244.5	203	145	375	213	147	190	96	106	120	141	178	48	34	66.5	25	44.5	38	21.5
330	3P	213	206	145	375	219	147	154.5	96	106	120	145	181	48	43	74	25	44.5	38	20.5
	4P	261	206	145	375	219	147	202.5	96	106	120	145	181	48	43	74	25	44.5	38	20.5

f = minimum distance required for coil removal

unit in mm

VC51F-400...500

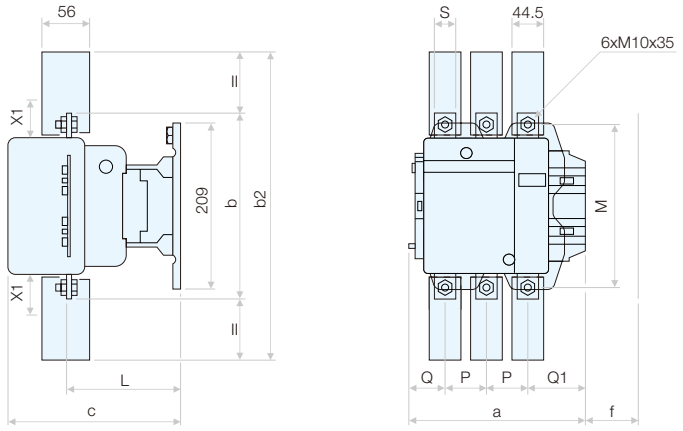

VC51F		a	b	b2	c	f	G*	G min.	G max.	G1*	G1 min.	G1 max.	J	L	M	P	Q	Q1	S
400	2P	213	206	375	219	119	80	66	102	170	156	192	19.5	145	181	48	69	96	25
	3P	213	206	375	219	119	80	66	102	170	156	192	19.5	145	181	48	43	74	25
	4P	261	206	375	219	119	80	66	150	170	156	240	67.5	145	181	48	43	74	25
500	2P	233	238	400	232	141	80	66	120	170	156	210	39.5	146	208	55	76	102	30
	3P	233	238	400	232	141	80	66	120	170	156	210	39.5	146	208	55	46	77	30
	4P	288	288	400	232	141	140	66	175	230	156	265	34.5	146	208	55	46	77	30

Outline and installation dimensions

unit in mm

VC51F-630...800

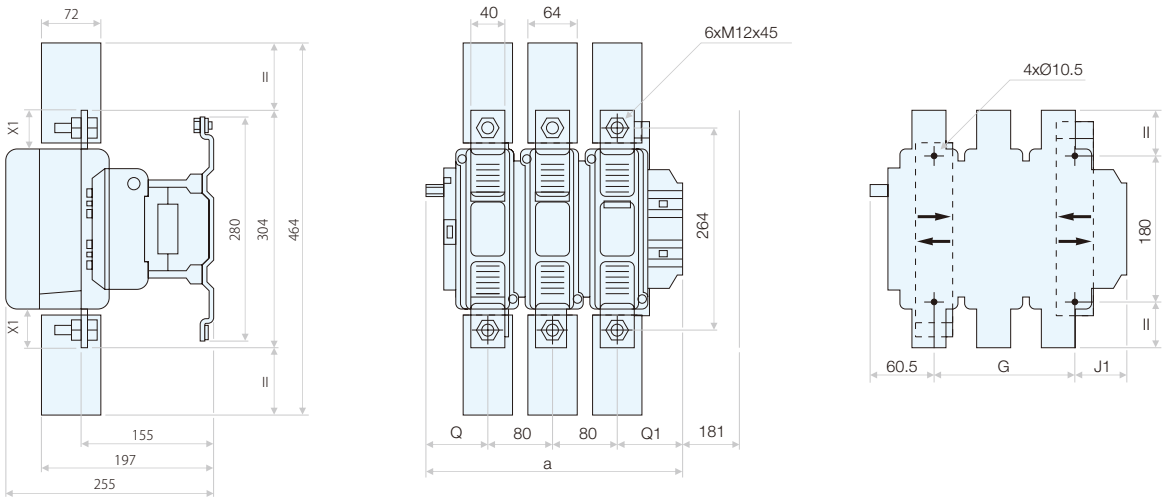

VC51F		a	G	G min.	G max.	J1	Q	Q1
630, 800	3P	309	180	100	195	68.5	60	89
630	4P	309	240	150	275	68.5	60	89

unit in mm

VC51F-780

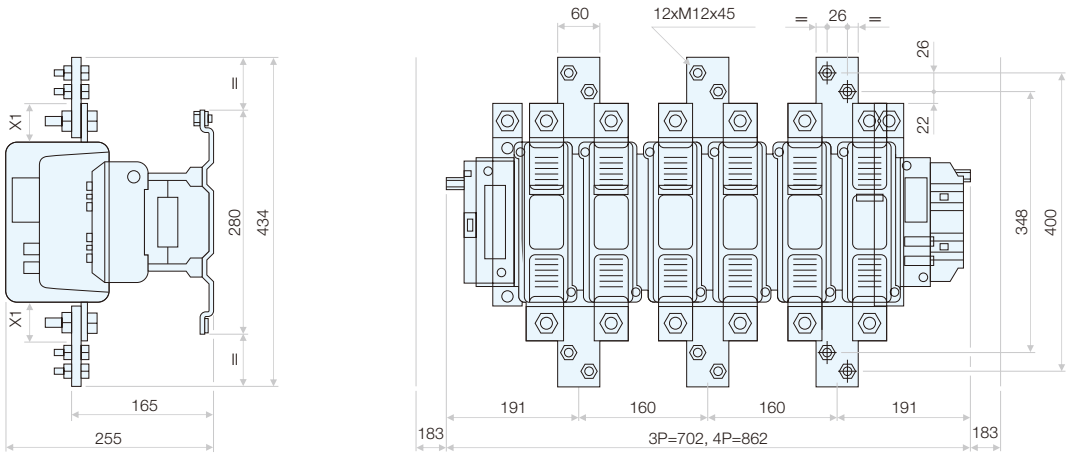

Capacitor Switching Contactors
Series VC51C

3

Applications and functions

- Switching parallel connection capacitance from low voltage reactive power compensating equipments
- Reducing efficiently the impact to capacitor and restraining over-voltage when switching ON/OFF with special flow-cut equipment



Technical specifications

Type			VC51C-25	VC51C-32	VC51C-43	VC51C-50	VC51C-63	VC51C-80	VC51C-95	VC51C-125
Rated insulating voltage Ui		V	690	690	690	690	690	690	690	690
Rated conventional thermal current Ith		A	25	32	43	50	63	80	95	125
Controllable power AC-6b	220/230 V	Kvar	6	8.5	10	12	15	22	23	25
	380/400 V	Kvar	12	16	20	25	30	37	45	50
	660/690 V	Kvar	12	16	20	25	30	37	45	50
Rated current of capacitor	400 V	A	17.3	23	29	36	43	53	65	72
Rated working current 1.3Ie		A	22.5	30	37.7	47	56	69	85	94
Restrained surge capacity			≤ 20 Ie	≤ 20 Ie	≤ 20 Ie	≤ 20 Ie	≤ 20 Ie	≤ 20 Ie	≤ 20 Ie	≤ 20 Ie
Coil consumed power	Starting	VA	70	100	100	245	245	245	245	245
	Holding	VA	9	10	10	30	30	30	30	30
Auxiliary contact type	2NO		√	√	√	-	-	-	-	-
	2NC		√	√	√	-	-	-	-	-
	1NO + 1NC		√	√	√	-	-	-	-	-
	2NO + 1NC		-	-	-	√	√	√	√	√
	1NO + 2NC		-	-	-	√	√	√	√	√
Mechanical life	10^4	times	300	300	300	100	100	100	80	80
Electrical life	10^4	times	10	10	10	6	6	6	6	6
Operating frequency		times/h	120	120	120	120	120	120	120	120
Pollution grade			3	3	3	3	3	3	3	3
Installation category			3	3	3	3	3	3	3	3
Installation type	screws		√	√	√	√	√	√	√	√
	35mm DIN-rail		√	√	√	√	√	√	√	√
	75mm DIN-rail		-	-	-	-	√	√	√	√
Ambient air temperature		℃	-5 ~ +40	-5 ~ +40	-5 ~ +40	-5 ~ +40	-5 ~ +40	-5 ~ +40	-5 ~ +40	-5 ~ +40
Altitude	max.	meter	2000	2000	2000	2000	2000	2000	2000	2000
Coil sectional area (mm^2)			4	6	10	10	16	25	35	50
Tightening torque (N·m)			1.7	2.0	2.5	5	5	5	9	9

Selection and ordering data

Rated operational power AC-6b at 220/230 V (kvar)	at 380/400 V (kvar)	at 660/690 V (kvar)	Rated conventional thermal current Ith (A)	Rated control circuit voltage V 50 Hz	Auxiliary contact		Type code
6	12	12	25	24	2	0	VC51C-2520-B5
					1	1	VC51C-2511-B5
					0	2	VC51C-2502-B5
				110	2	0	VC51C-2520-F5
					1	1	VC51C-2511-F5
					0	2	VC51C-2502-F5
				230	2	0	VC51C-2520-P5
					1	1	VC51C-2511-P5
					0	2	VC51C-2502-P5
8.5	16	16	32	24	2	0	VC51C-3220-B5
					1	1	VC51C-3211-B5
					0	2	VC51C-3202-B5
				110	2	0	VC51C-3220-F5
					1	1	VC51C-3211-F5
					0	2	VC51C-3202-F5
				230	2	0	VC51C-3220-P5
					1	1	VC51C-3211-P5
			40		0	2	VC51C-3202-P5
10	20	20		24	2	0	VC51C-4320-B5
					1	1	VC51C-4311-B5
					0	2	VC51C-4302-B5
				110	2	0	VC51C-4320-F5
					1	1	VC51C-4311-F5
					0	2	VC51C-4302-F5
				230	2	0	VC51C-4320-P5
					1	1	VC51C-4311-P5
					0	2	VC51C-4302-P5
12	25	25	50	24	1	2	VC51C-5012-B5
					2	1	VC51C-5021-B5
				110	1	2	VC51C-5012-F5
					2	1	VC51C-5021-F5
				230	1	2	VC51C-5012-P5
					2	1	VC51C-5021-P5
15	30	30	65	24	1	2	VC51C-6312-B5
					2	1	VC51C-6321-B5
				110	1	2	VC51C-6312-F5
					2	1	VC51C-6321-F5
				230	1	2	VC51C-6312-P5
					2	1	VC51C-6321-P5
22	37	37	80	24	1	2	VC51C-8012-B5
					2	1	VC51C-8021-B5
				110	1	2	VC51C-8012-F5
					2	1	VC51C-8021-F5
				230	1	2	VC51C-8012-P5
					2	1	VC51C-8021-P5
23	45	45	95	24	1	2	VC51C-9512-B5
					2	1	VC51C-9521-B5
				110	1	2	VC51C-9512-F5
					2	1	VC51C-9521-F5
				230	1	2	VC51C-9512-P5
					2	1	VC51C-9521-P5
25	50	50	125	24	1	2	VC51C-12512-B5
					2	1	VC51C-12521-B5
				110	1	2	VC51C-12512-F5
					2	1	VC51C-12521-F5
				230	1	2	VC51C-12512-P5
					2	1	VC51C-12521-P5

Capacitor Switching Contactors
Series VC51C

Terminal and electric diagram

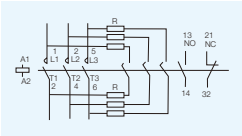

VC51C-2511
VC51C-3211
VC51C-4311

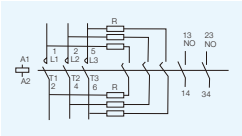

VC51C-2520
VC51C-3220
VC51C-4320

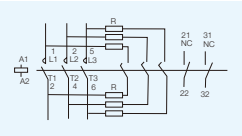

VC51C-2502
VC51C-3202
VC51C-4302

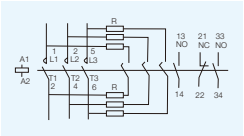

VC51C-5021
VC51C-6321
VC51C-8021
VC51C-9521
VC51C-12521

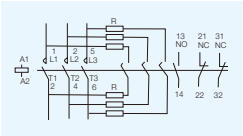

VC51C-5012
VC51C-6312
VC51C-8012
VC51C-9512
VC51C-12512

3

Outline and installation dimensions

unit in mm

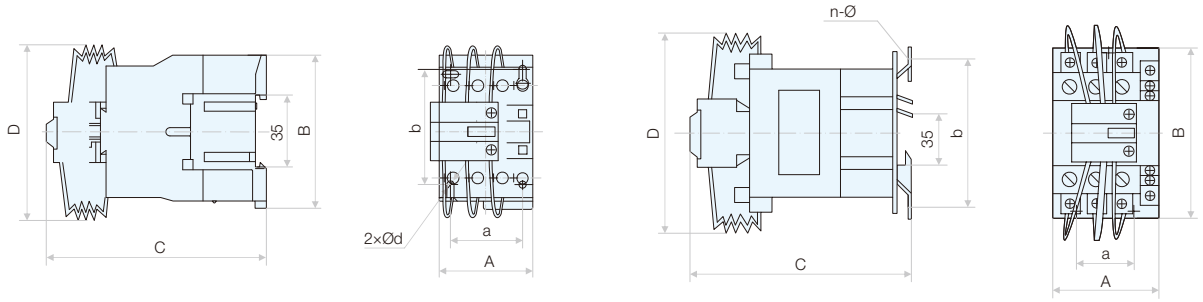

Type	Outline dimensions				Installation dimensions		
	A	B	C	D	a	b	C
VC51C-25	47	76	124	100	34/35	50/60	2-Ø4.5
VC51C-32	57	86	132	110	40	50/60	2-Ø4.5
VC51C-43	57	86	136	110	40	50/60	2-Ø4.5
VC51C-50	77	129	152	155	40	100/110	3-Ø6.5
VC51C-63	77	129	152	155	40	100/110	3-Ø6.5
VC51C-80	77	129	152	155	40	100/110	3-Ø6.5
VC51C-95	87	129	162	165	40	100/110	3-Ø6.5
VC51C-125	87	129	162	165	40	100/110	3-Ø6.5

Applications and functions

- Protecting the loads from overload and phase failure
- Implementing short-circuit protection by means of a fuse or circuit breaker.
- Used for the protection of motors.



Techinical specifications for assembled thermal relay of type VC51K

- Type: VTR51K
- Standard: IEC 60947-4-1
- Tripping class: 10 A
- Number of connecting pin: 4
- Rated operational voltage Ue (V): up to 690
- Rated insulation voltage Ui (V): 690
- Rated impulse withstand voltage Uimp (kV): 6
- Rated current range In (A):
  0.11-0.16, 0.16-0.23,
  0.23-0.36, 0.36-0.54,
  0.54-0.8, 0.8-1.2,
  1.8-2.6, 2.6-3.7,
  3.7-5.5, 5.-8,
  8-11.5, 10-14
- Signalling: Trip indicator
- Tightening torque (N·m): 0.8
- Degree of protection: IP20
- Ambient air temperature (°C): -5 to +40, max. 95 % humidity
- Storage temperature (°C): -40 ~ +75
- Maximum operating altitude (meters): 2000
- Flame resistance: V1
- Mounting: directly under the contactor

Selection and ordering data

Thermal overload relays VTR51K

	For contactors	Current setting range (A)	Fuses to be used with selected relay aM (A)	gG (A)	Type code
	VC51K	0.11 ... 0.16	0.25	0.5	VTR51K-5-0.16
		0.16 ... 0.23	0.25	0.5	VTR51K-5-0.23
		0.23 ... 0.36	0.5	1	VTR51K-5-0.36
		0.36 ... 0.54	1	1.6	VTR51K-5-0.54
		0.54 ... 0.8	1	2	VTR51K-5-0.8
		0.8 ... 1.2	2	6	VTR51K-5-1.2
		1.2 ... 1.8	2	8	VTR51K-5-1.8
		1.8 ... 2.6	4	8	VTR51K-5-2.6
		2.6 ... 3.7	4	10	VTR51K-5-3.7
		3.7 ... 5.5	6	16	VTR51K-5-5.5
		5.5 ... 8	8	20	VTR51K-5-8
		8 ... 11.5	10	25	VTR51K-5-11.5
		10 ... 14	16	32	VTR51K-5-14
		12 ... 16	20	40	VTR51K-5-16

Tripping curve of thermal relay VTR51K

Average operating time related to multiples of the current setting (Class 10 A)

Balanced 3-phase operation, from cold state

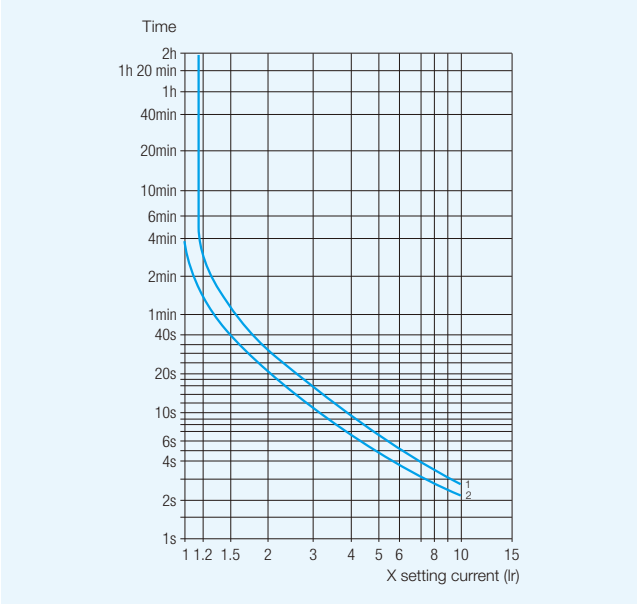

Balanced operation with 2 phases only, from cold state

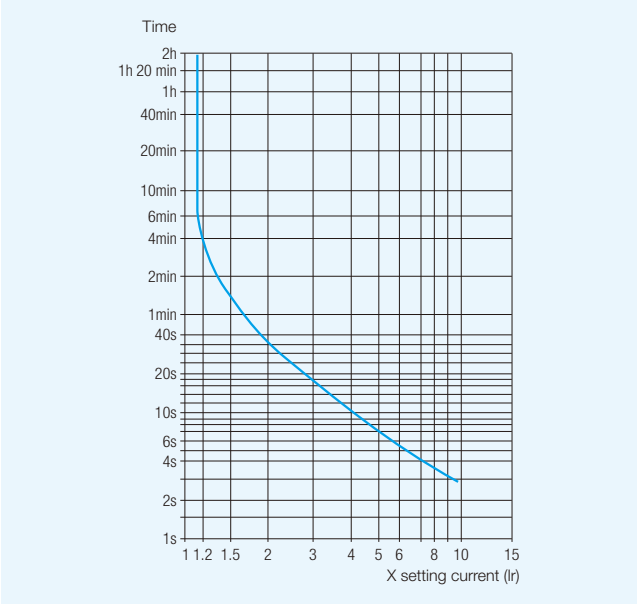

1 Setting: at lower end of scale
2 Setting: at upper end of scale

Outline and installation dimensions

unit in mm

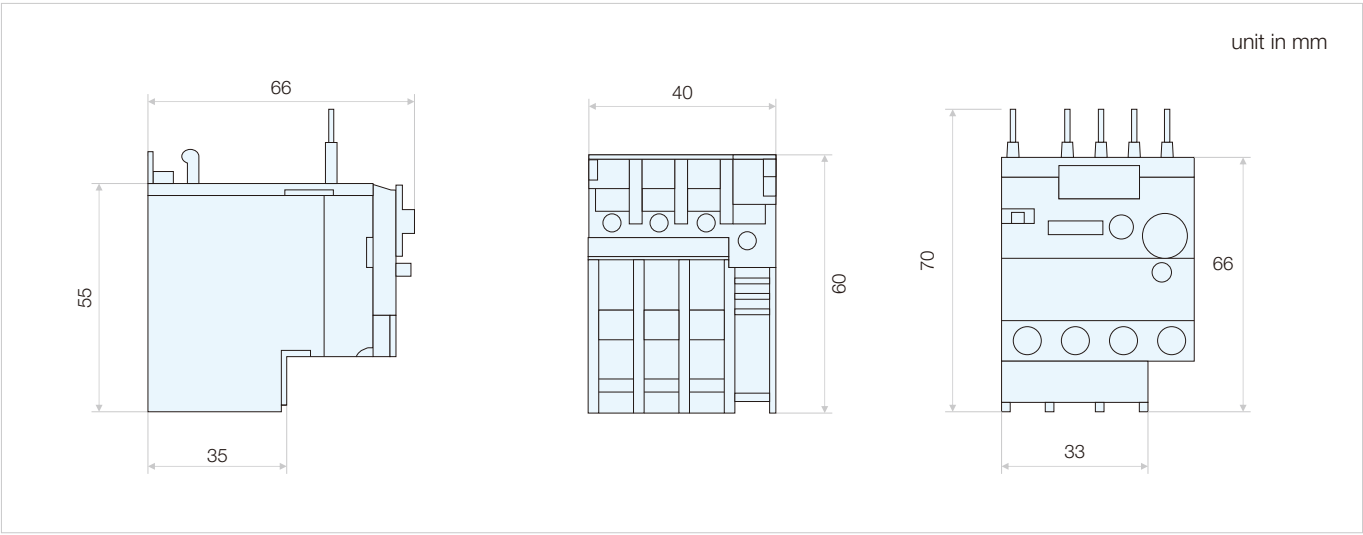

Applications and functions

- Protecting the loads from overload and phase failure
- Implementing short-circuit protection by means of a fuse or circuit breaker.
- Used for the protection of motors.



Technical specifications

Type	VTR51-25	VTR51-36	VTR51-93
Standard	IEC 60947-4-1		
Tripping class	10 A		
Rated working current Ie (A)	25	36	93
Setting range (A)	0.1-0.16, 0.16-0.25, 0.25-0.4, 0.4-0.63, 0.63-1, 1-1.6, 1.25-2, 1.6-2.5, 2.5-4, 4-6, 5.5-8, 7-10, 9-13, 12-18, 17-25	23-32, 28-36,	23-32, 30-40, 37-50, 48-65, 55-70, 63-80, 80-93
Rated insulation voltage Ui (V)	690		
Rated impulse withstand voltage Uimp (kV)	6		
Signalling Trip indicator	Trip indicator		
Tightening torque (N·m)	0.8		
Degree of protection	IP20		
Ambient air temperature (°C)	-5 to +40, max. 95 % humidity		
Storage temperature (°C)	-40 ~ +75		
Maximum operating altitude (meters)	2000		
Flame resistance	V1		
Mounting	Directly under the contactor		

Thermal Overload Relays
VTR51

Selection and ordering data

VTR51

Type	For contactor	Current setting range (A)	Fuses to be used with selected relay aM (A)	gG (A)	Type code
VTR51-25	VC51-09	0.1~0.16	0.25	2	VTR51-25-0.16
		0.16~0.25	0.25	2	VTR51-25-0.25
		0.25~0.4	1	2	VTR51-25-0.4
		0.4~0.63	1	2	VTR51-25-0.63
		0.63~1	2	4	VTR51-25-1
		1~1.6	2	4	VTR51-25-1.6
		1.25~2	4	6	VTR51-25-2
		1.6~2.5	4	6	VTR51-25-2.5
		2.5~4	6	10	VTR51-25-4
		4~6	8	16	VTR51-25-6
		5.5~8	12	20	VTR51-25-8
	VC51-12	7~10	12	20	VTR51-25-10
		9~13	16	25	VTR51-25-13
	VC51-18	12~18	20	35	VTR51-25-18
	VC51-25	17~25	25	50	VTR51-25-25
VTR51-36	VC51-32	23~32	40	63	VTR51-36-32
		28~36	40	80	VTR51-36-36
VTR51-93	VC51-40	23~32	40	63	VTR51-93-32
		30~40	40	100	VTR51-93-40
	VC51-50	37~50	63	100	VTR51-93-50
	VC51-65	48~65	63	100	VTR51-93-65
	VC51-80	55~70	80	125	VTR51-93-70
		63~80	80	125	VTR51-93-80
	VC51-95	80~93	100	160	VTR51-93-93

Terminal block adapter for mounting a relay

For relays	Type code
VTR51-25	VTR51-A71
VTR51-36	VTR51-A72
VTR51-93	VTR51-A73

Operating characterisitics

Average operating time related to multiples of the current setting (Class 10 A)

Balanced 3-phase operation, from cold state

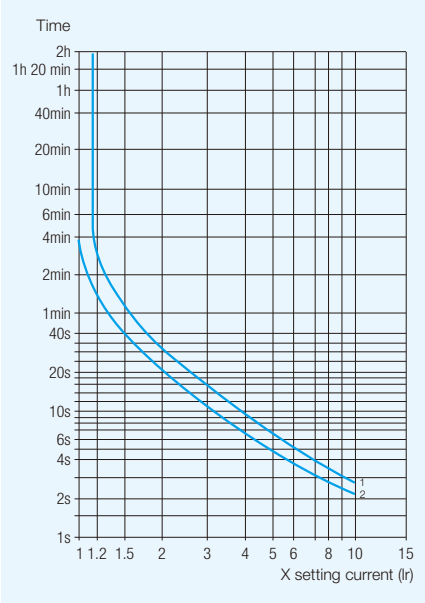

Balanced operation with 2 phases only, from cold state

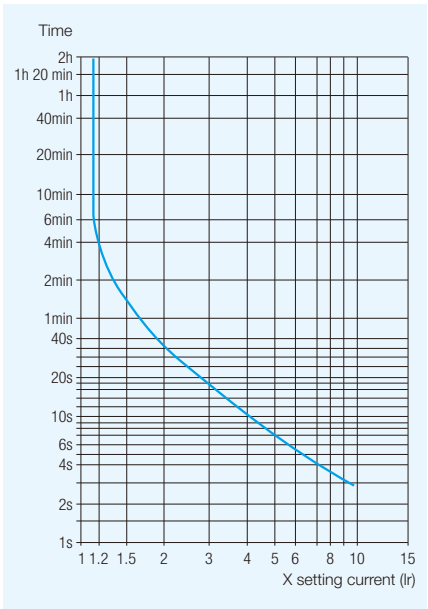

1 Setting: at lower end of scale
2 Setting: at upper end of scale

Tripping curve

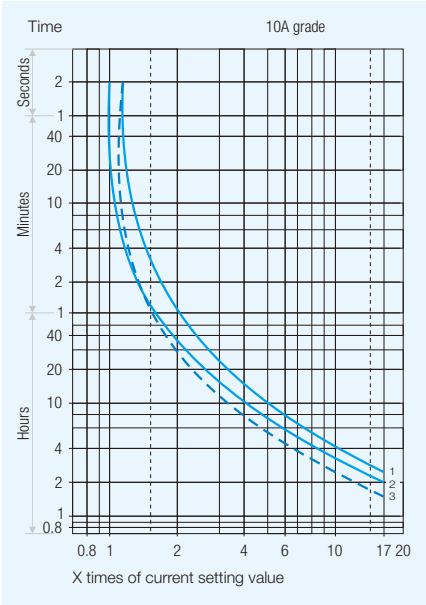

1. Equilibrium running, 3 phase, start from cold state
2. Equilibrium running, 2 phase, start from cold state
3. Equilibrium running, 3 phase, after long period of setting current (hot state)

Outline and installation dimensions

unit in mm

VTR51-25

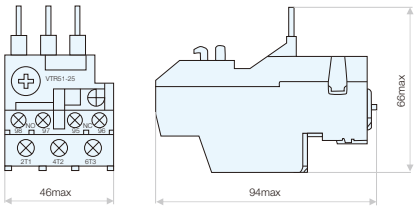

VTR51-36

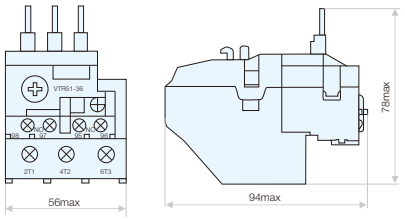

VTR51-93

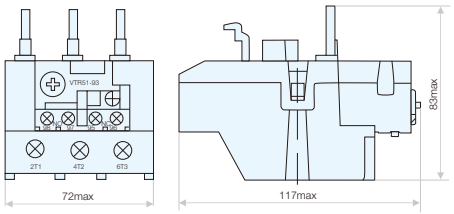

Operating principle diagram

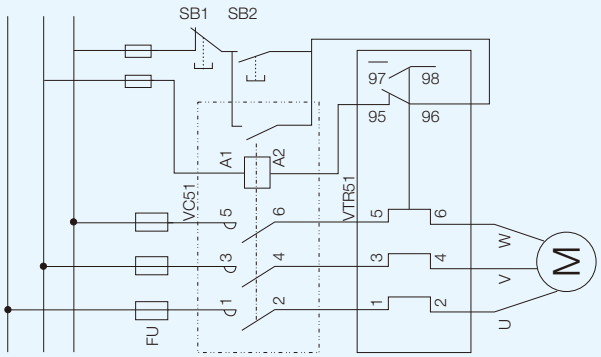

FU - fuse
VC51 - AC contactor
VTR51 - thermal relay
SB1 - stop button
SB2 - start button

Thermal Overload Relays
Series VTR51F

Applications and functions

- Protecting the loads from overload and phase failure
- Implementing short-circuit protection by means of a fuse or a circuit breaker.
- Used for the protection of motors.



Techinical specifications

Type	VTR51F-53	VTR51F-73
Standard	IEC 60947-4-1	
Tripping class	10 A, 20 A	
Rated operational voltage Ue (V)	1000	
Rated working current Ie (A)	220	630
Setting range (A)	30 … 50, 48 … 80, 60 … 100, 90 … 150, 132 … 220	200 … 330, 300 … 500, 380 … 630
Reset	Manual on front of relay	
Rated insulation voltage Ui (V)	1000	
Rated impulse withstand voltage Uimp (kV)	6	
Tightening torque (N·m)	0.8	
Degree of protection	IP20	
Ambient air temperature (°C)	-5 to +40, max. 95 % humidity	
Storage temperature (°C)	-40 ~ +75	
Maximum operating altitude (meters)	2000	
Flame resistance	V1	

Tripping curve

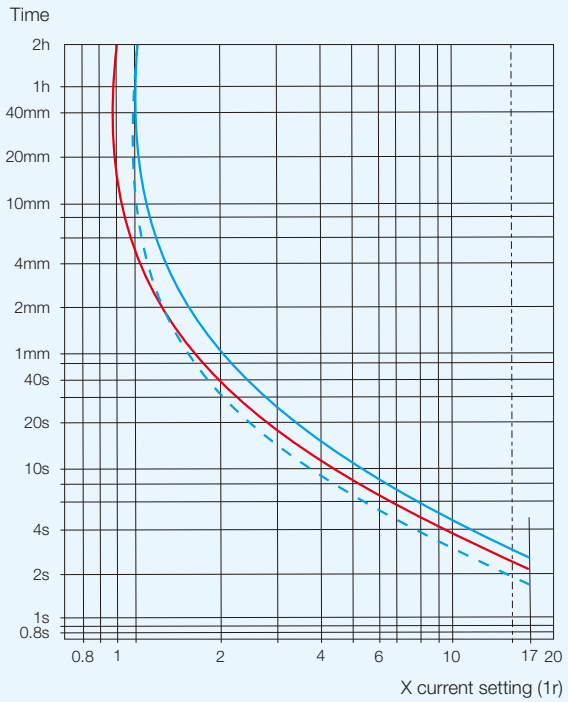

Selection and ordering data





Type	For contactor	Current setting range	Fuses to be used with selected relay		
			aM	gG	
		(A)	(A)	(A)	Type code
VTR51F-53	VC51F 115 … 185	30 … 50	50	80	VTR51F-53-50
		48 … 80	80	125	VTR51F-53-80
		60 … 100	100	200	VTR51F-53-100
		90 … 150	160	250	VTR51F-53-150
		132 … 220	250	315	VTR51F-53-220
VTR51F-73	VC51F 225 … 500	200 … 330	400	500	VTR51F-73-330
		300 … 500	500	800	VTR51F-73-500
	VC51F 400 … 630	380 … 630	630	800	VTR51F-73-630

Outline and installation dimensions

unit in mm

VTR51F-53

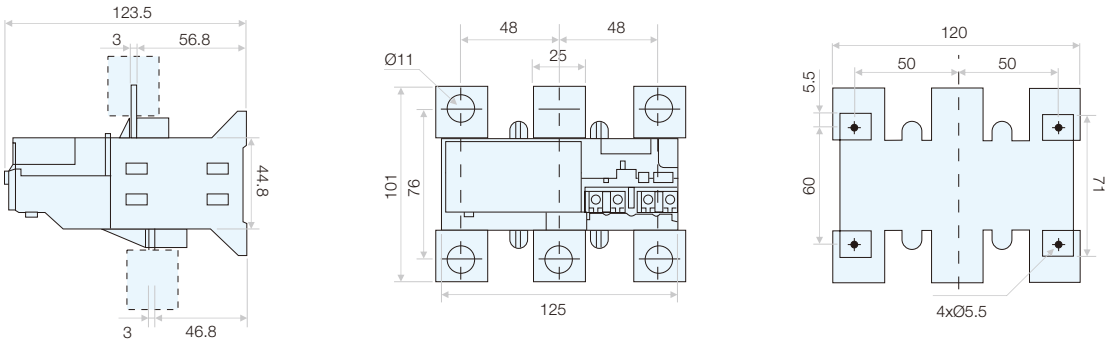

VTR51F-73

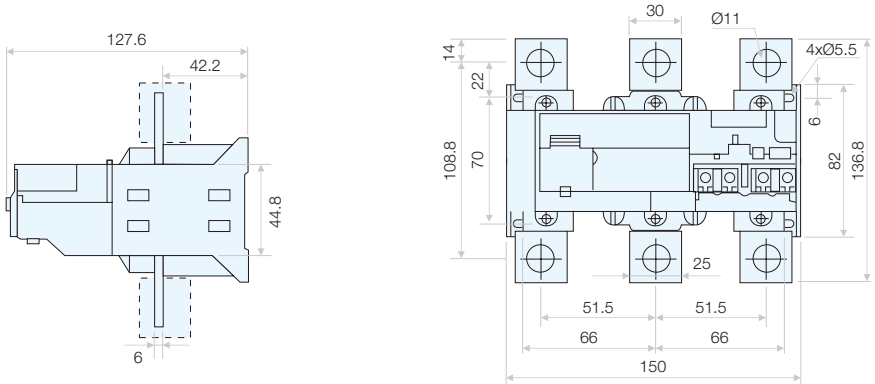

Enclosed Direct-on-line (DOL) Staters
Series VQ51

Applications and functions



- Controlling the direct start and halt of the electromotor
- Protecting the motor from overload and phase failure
- Used in remote making and breaking circuit and frequently starting and controlling motor.

Technical specifications

- Standards: IEC 60947-4-1, IEC 60439-1
- Rated working current (A): 09, 12, 18, 25, 32, 40, 50, 65, 80, 95
- Rated operational voltage Ue (V): 690
- Rated insulation voltage Ui (V): 690
- Rated impulse withstand voltage Uimp (kV): 8
- Rated frequency (Hz): 50/60
- Control (2 pushbuttons mounted on enclosure cover): 1 green Start button “I”; 1 red Stop/Reset button “O”
- Enclosure: VQ51-09/12/18 Double insulated, degree of protection IP65;
  VQ51-25/32 Double insulated, degree of protection IP55;
  VQ51-40/50/65/80/95 Metal, degree of protection IP65
- Electrical life (× 10^5 times): 5
- Mechanical life (× 10^5 times): 50
- Matched AC contactor: VC51
- Matched thermal overload relay: VTR51
- Ambient air temperature (°C): -5 to +40, max. 95 % humidity
- Storage temperature (°C): -40 ~ +75
- Maximum operating altitude (meters): 2000

Selection and ordering data

	Rated operational power AC-3 220/230 V (kW)	380/400 V (kW)	660/690 V (kW)	Rated operational I current AC-3 380/400 V (A)	Rated conventional thermal current Ith (A)	Rated control circuit voltage V 50 Hz	Type code
	2.2	4	5.5	9	20	24	VQ51-09-B5
						110	VQ51-09-F5
						230	VQ51-09-P5
	3	5.5	7.5	12	20	24	VQ51-12-B5
						110	VQ51-12-F5
						230	VQ51-12-P5
	4	7.5	9	18	32	24	VQ51-18-B5
						110	VQ51-18-F5
						230	VQ51-18-P5
	5.5	11	15	25	40	24	VQ51-25-B5
						110	VQ51-25-F5
						230	VQ51-25-P5
	7.5	15	18.5	32	50	24	VQ51-32-B5
						110	VQ51-32-F5
						230	VQ51-32-P5
	11	18.5	30	40	60	24	VQ51-40-B5
						110	VQ51-40-F5
						230	VQ51-40-P5
	15	22	33	50	80	24	VQ51-50-B5
						110	VQ51-50-F5
						230	VQ51-50-P5
	18.5	30	37	65	80	24	VQ51-65-B5
						110	VQ51-65-F5
						230	VQ51-65-P5
	22	37	45	80	110	24	VQ51-80-B5
						110	VQ51-80-F5
						230	VQ51-80-P5
	25	45	45	95	125	24	VQ51-95-B5
						110	VQ51-95-F5
						230	VQ51-95-P5

Outline and installation dimensions

unit in mm

VQ51-09/12/18

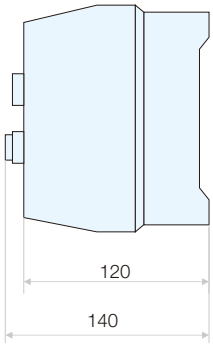

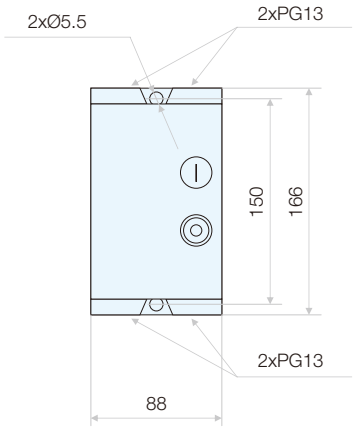

VQ51-25/32

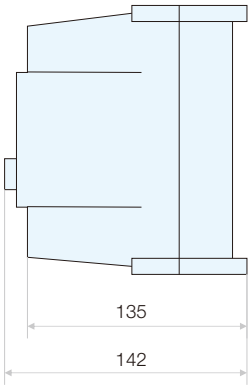

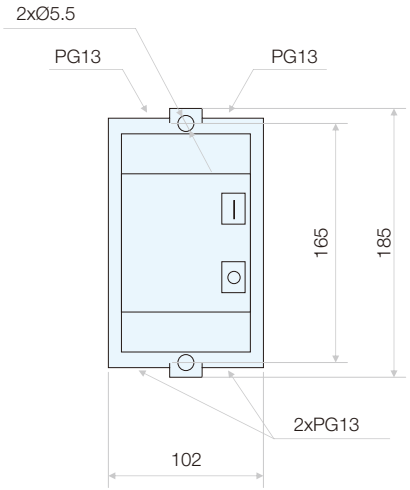

VQ51-40/50/65/80/95

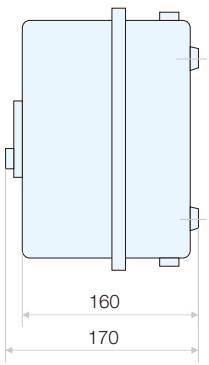

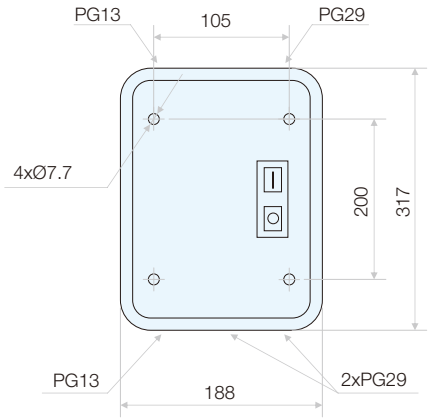

Star-delta Starters
Series VXQ51

Applications and functions

- For startup of motor that has heavy duty and current used is high
- Reducing the starting current and starting torque when motor starts up
- Smaller circuit breakers and thinner 3-phase line wires can be installed to supply power to the motor

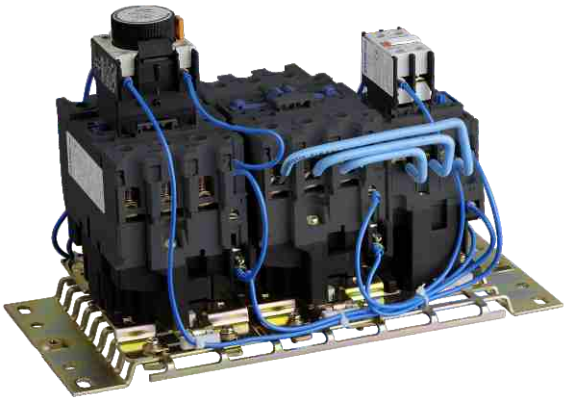

Selection and ordering data

Rated operational power AC-3 220/230 V (kW)	380/400 V (kW)	660/690 V (kW)	660/690 V (kW)	Rated operational I current AC-3 380/400 V (A)	Rated control circuit voltage V 50 Hz	Type code
4	7.5	7.5	7.5	9	24	VXQ51-09-B5
					110	VXQ51-09-F5
					230	VXQ51-09-P5
5.5	11	11	11	12	24	VXQ51-12-B5
					110	VXQ51-12-F5
					230	VXQ51-12-P5
7.5	15	15	18.5	18	24	VXQ51-18-B5
					110	VXQ51-18-F5
					230	VXQ51-18-P5
11	18.5	18.5	22	25	24	VXQ51-25-B5
					110	VXQ51-25-F5
					230	VXQ51-25-P5
15	25	25	30	32	24	VXQ51-32-B5
					110	VXQ51-32-F5
					230	VXQ51-32-P5
18.5	33	33	37	40	24	VXQ51-40-B5
					110	VXQ51-40-F5
					230	VXQ51-40-P5
25	45	45	59	50	24	VXQ51-50-B5
					110	VXQ51-50-F5
					230	VXQ51-50-P5
30	55	55	59	65	24	VXQ51-65-B5
					110	VXQ51-65-F5
					230	VXQ51-65-P5
37	63	63	75	80	24	VXQ51-80-B5
					110	VXQ51-80-F5
					230	VXQ51-80-P5
45	80	80	80	95	24	VXQ51-95-B5
					110	VXQ51-95-F5
					230	VXQ51-95-P5

Outline and installation dimensions

unit in mm

VXQ51-09~32

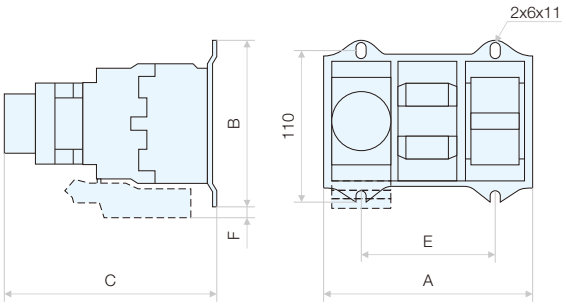

VXQ51-40~95

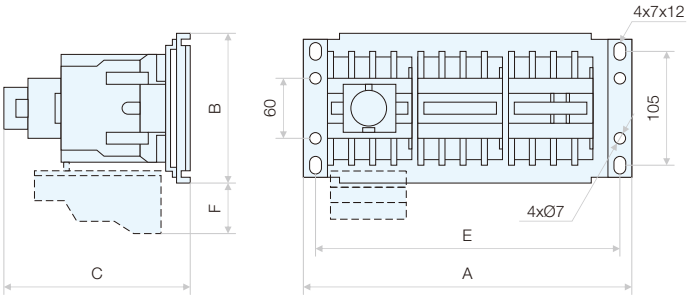

Model	A	B	C	E	F
VXQ51-09~18	135	124	153	90±0.5	22
VXQ51-25~32	166	124	165	90±0.5	35
VXQ51-40~65	285	143	178	267±1.0	50
VXQ51-80~95	315	143	187	297±1.0	80

Motor Protection Circuit Breakers
Series VMP51

Applications and functions

- Providing motor overload protection and short-circuit protection.



Technical specifications

Type			VMP512															VMP513	
Standards			IEC 60947-2, IEC 60947-4-1																
Utilization category	according to IEC 60947-2		A																
	according to IEC 60947-4-1		AC-3																
Rated insulation voltage Ui (V)			690																
Rated operational voltage Ue (V)			230/240, 400/415, 440, 500, 660/690																
Rated impulse withstand voltage Uimp (kA)			8																
Rated range of setting current (A)			0.1-0.16	0.16-0.25	0.25-0.4	0.4-0.63	0.63-1	1-1.6	1.6-2.5	2.5-4	4-6.3	6-10	9-14	13-18	17-23	20-25	24-32	25-40	40-63	56-80
Rated current of release (A)			0.16	0.25	0.4	0.63	1	1.6	2.5	4	6	10	14	18	23	25	32	40	63	80
Rated frequency (Hz)			50/60																
Rated ultimate short-circuit breaking capacity Icu (kA)	230/240 V		100	100	100	100	100	100	100	100	100	100	100	100	50	50	100	100	100	100
	400/415 V		100	100	100	100	100	100	100	100	100	100	15	15	15	15	35	35	35	35
	440 V		100	100	100	100	100	100	100	100	100	100	8	8	6	6	-	25	25	25
	500 V		100	100	100	100	100	100	100	100	100	100	6	6	4	4	-	8	8	8
	660/690 V		100	100	100	100	100	100	3	3	3	3	3	3	3	3	-	4	4	4
Rated service short-ciurcuit breaking capacity Ics (kA)	230/240 V		100	100	100	100	100	100	100	100	100	100	100	100	50	50	75	75	75	75
	400/415 V		100	100	100	100	100	100	100	100	100	100	7.5	6	7.5	6	17.5	17.5	17.5	17.5
	440 V		100	100	100	100	100	100	100	100	100	100	4	4	3	3	-	12.5	12.5	12.5
	500 V		100	100	100	100	100	100	100	100	100	100	4.5	4.5	3	3	-	4	4	4
	660/690 V		100	100	100	100	100	100	2.25	2.25	2.25	2.25	2.25	2.25	2.25	2.25	-	2	2	2
Arcing distance(mm)			40	40	40	40	40	40	40	40	40	40	40	40	40	40	50	50	50	50
Standard rated power of three-phase (kW)	230/240 V		-	-	-	-	-	-	0.37	0.75	1.1	2.2	3	4	5.5	5.5	5.5	11	15	22
	400 V		-	-	-	-	-	0.37	0.75	1.5	2.2	4	5.5	7.5	11	11	11	18.5	30	40
	500 V		-	-	-	-	-	-	0.75	1.5	2.2	4	5.5	9	11	11	11	22	33	45
	440 V		-	-	-	-	0.37	0.55	1.1	1.5	3	4	7.5	9	11	11	-	22	33	45
	500 V		-	-	-	-	0.37	0.75	1.1	2.2	3.7	5.5	7.5	9	11	11	-	25	40	55
	660/690 V		-	-	-	0.37	0.55	1.1	1.5	3	4	7.5	9	11	15	15	-	33	55	63
Current setting value of instantaneous eletromagnetic release Ir (A)			1.5	2.4	5	8	13	22.5	33.5	51	78	138	170	223	327	327	327	480	756	960
Current rating off use-link of back-up fuse, which is only needed in case of Icc>Icu (Icc: prospective short-circuit breaking current)	230/240 V	aM A	●	●	●	●	●	●	●	●	●	●	●	●	80	80	●	●	●	●
		gI/gG A	●	●	●	●	●	●	●	●	●	●	●	●	100	100	●	●	●	●
	400/415 V	aM A	●	●	●	●	●	●	●	●	●	●	63	63	63	63	●	250	315	315
		gI/gG A	●	●	●	●	●	●	●	●	●	●	80	80	80	80	●	315	400	400
	440 V	aM A	●	●	●	●	●	●	●	●	50	50	50	50	50	50	-	250	315	315
		gI/gG A	●	●	●	●	●	●	●	●	63	63	63	63	63	63	-	315	400	400
	500 V	aM A	●	●	●	●	●	●	●	●	50	50	50	50	50	50	-	160	200	200
		gI/gG A	●	●	●	●	●	●	●	●	63	63	63	63	63	63	-	200	250	250
● Fuse is not required	500 V	aM A	●	●	●	●	●	●	16	25	32	32	40	40	40	40	-	160	200	200
		gI/gG A	●	●	●	●	●	●	20	32	40	40	50	50	50	50	-	200	250	250
Add-on auxiliary contact blocks	Front mounting		1NO+1NC, 2NO															-	
	Side mounting		1NO+1NC, 2NO															-	
Shunt release			●															-	
Under voltage release			●															-	
Auxiliary alarm			1NO+1NO, 1NO+1NC, 1NC+1NO, 1NC+1NC															-	
Enclosure			●															-	
Electrical life in AC-3 (times)			10000																
Mechanical life (times)			20000																
Tightening torque (N·m)			1.7																
Degree of protection			IP20; IP65 with enclosure																
Ambient air temperature (°C)			-5 to +40, max. 95 % humidity																
Storage temperature (°C)			-40~+75																
Maximum operating altitude (meters)			2000																

Selection and ordering data

	Rated current In (A)	Rated operational power of three-phase motors AC-3 400W (kW)	Setting range for thermal overload release	Rated instantaneous short-circuit current setting Ir (A)	Type code
Controlled by pushbutton					
	0.16	0.06	0.1 ... 0.16	1.5	VMP512-0.16-M
	0.25	0.06	0.16 ... 0.25	2.4	VMP512-0.25-M
	0.4	0.09	0.25 ... 0.4	5	VMP512-0.4-M
	0.63	0.18	0.4 ... 0.63	8	VMP512-0.63-M
	1	0.25	0.63 ... 1	13	VMP512-1-M
	1.6	0.37	1 ... 1.6	22.5	VMP512-1.6-M
	2.5	0.75	1.6 ... 2.5	33.5	VMP512-2.5-M
	4	1.5	2.5 ... 4	51	VMP512-4-M
	6.3	2.2	4 ... 6.3	78	VMP512-6.3-M
	10	4	6 ... 10	138	VMP512-10-M
	14	5.5	9 ... 14	170	VMP512-14-M
	18	7.5	13 ... 18	223	VMP512-18-M
	23	9	17 ... 23	327	VMP512-23-M
	25	11	20 ... 25	327	VMP512-25-M
	32	11	24 ... 32	327	VMP512-32-M
	40	18.5	25 ... 40	480	VMP513-40
	63	30	40 ... 63	756	VMP513-63
	80	40	55 ... 80	960	VMP513-80
Controlled by rocker lever					
	0.16	0.06	0.1 ... 0.16	1.5	VMP512-0.16-RS
	0.25	0.06	0.16 ... 0.25	2.4	VMP512-0.25-RS
	0.4	0.09	0.25 ... 0.4	5	VMP512-0.4-RS
	0.63	0.18	0.4 ... 0.63	8	VMP512-0.63-RS
	1	0.25	0.63 ... 1	13	VMP512-1-RS
	1.6	0.37	1 ... 1.6	22.5	VMP512-1.6-RS
	2.5	0.75	1.6 ... 2.5	33.5	VMP512-2.5-RS
	4	1.5	2.5 ... 4	51	VMP512-4-RS
	6.3	2.2	4 ... 6.3	78	VMP512-6.3-RS
	10	4	6 ... 10	138	VMP512-10-RS
	14	5.5	9 ... 14	170	VMP512-14-RS
	18	7.5	13 ... 18	223	VMP512-18-RS
	23	9	17 ... 23	327	VMP512-23-RS
	25	11	20 ... 25	327	VMP512-25-RS
	32	11	24 ... 32	327	VMP512-32-RS
Controlled by pushbutton, with enclosure					
	0.16	0.06	0.1 ... 0.16	1.5	VMP514-0.16-M
	0.25	0.06	0.16 ... 0.25	2.4	VMP514-0.25-M
	0.4	0.09	0.25 ... 0.4	5	VMP514-0.4-M
	0.63	0.18	0.4 ... 0.63	8	VMP514-0.63-M
	1	0.25	0.63 ... 1	13	VMP514-1-M
	1.6	0.37	1 ... 1.6	22.5	VMP514-1.6-M
	2.5	0.75	1.6 ... 2.5	33.5	VMP514-2.5-M
	4	1.5	2.5 ... 4	51	VMP514-4-M
	6.3	2.2	4 ... 6.3	78	VMP514-6.3-M
	10	4	6 ... 10	138	VMP514-10-M
	14	5.5	9 ... 14	170	VMP514-14-M
	18	7.5	13 ... 18	223	VMP514-18-M
	23	9	17 ... 23	327	VMP514-23-M
	25	11	20 ... 25	327	VMP514-25-M
	32	11	24 ... 32	327	VMP514-32-M

Accessories for VMP512

	Description	Mounting	Type code
	Enclosure	Surface	VMP512B

Selection and ordering data

Accessories for VMP512

	Description	Mounting	Type of contact		Type code
	Auxiliary contact	Front	1NO + 1NC		VMP512-AE11
			2NO		VMP512-AE20
		Side	1NO + 1NC		VMP512-AN11
			2NO		VMP512-AN20
	Fault signal contact	Side	1NO (Fault)	+ 1NO	VMP512-AD1010
				+ 1NC	VMP512-AD1001
			1NC (Fault)	+ 1NO	VMP512-AD0110
				+ 1NC	VMP512-AD0101

	Description	Mounting	Voltage (V)		Type code
	Under-voltage release	Side	110 … 127	50/60 Hz	VMP512-AU115
			220 … 240	50/60 Hz	VMP512-AU225
			380 … 415	50/60 Hz	VMP512-AU385
	Shunt release	Side	110 … 127	50/60 Hz	VMP512-AS115
			220 … 240	50/60 Hz	VMP512-AS225
			380 … 415	50/60 Hz	VMP512-AS385

Tripping Curve

Average operating times at 20 °C related to multiples of the setting current

1: 3 poles from cold state; 2: 2 poles from cold state; 3: 3 poles from hot state

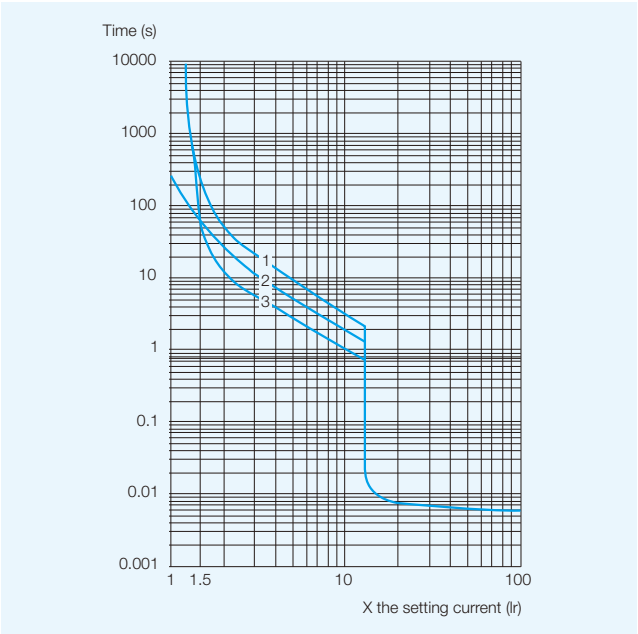

Outline and installation dimensions

unit in mm

